Supreme Court of Ohio Clerk of Court - Filed November 24, 2015 - Case No. 2015-0132

IN THE SUPREME COURT OF OHIO
CASE NO. 2015-0132

DOUGLAS V. LINK, *et al.*,
Appellees,

v.

THE CLEVELAND ELECTRIC ILLUMINATING COMPANY, *et al.*,
Appellants,

ON APPEAL FROM THE CUYAHOGA COUNTY COURT OF APPEALS
EIGHTH APPELLATE DISTRICT
CASE NO. CA-14-101286

MERIT BRIEF OF APPELLEES DOUGLAS V. LINK AND DIANE LINK

Thomas I. Michals (0040822)
(COUNSEL OF RECORD)
John J. Eklund (0010895)
William E. Coughlin (0010874)
Eric S. Zell (0084318)
CALFEE, HALTER & GRISWOLD LLP
The Calfee Building
1405 East Sixth Street
Cleveland, Ohio 44114
Tel: (216) 622-8200
Fax: (216) 241-0816
tmichals@calfee.com
jeklund@calfee.com
wcoughlin@calfee.com
ezell@calfee.com

Attorneys for Appellants,
The Cleveland Electric Illuminating Company
and FirstEnergy Service Company

Joseph J. Triscaro (0081209)
(COUNSEL OF RECORD)
DEMARCO & TRISCARO, LTD.
30505 Bainbridge Road
Suite 110
Solon, Ohio 44139
Tel: (440) 248-8811
Fax: (440) 248-1599
jtriscaro@demarcotriscaro.com

Attorney for Appellees,
Douglas V. Link and Diane Link

TABLE OF CONTENTS

TABLE OF AUTHORITIES iv

STATEMENT OF FACTS 1

I. RELEVANT FACTUAL HISTORY 1

A. The Savage Road Reconstruction and Widening Project. 1

1. Passage of Resolutions of Convenience and Necessity. 1

2. The Preconstruction Meeting and Transmittal of the Original Pole Relocation Plans. 1

3. CEI's Abandonment of the Project. 2

B. The Geauga County Engineer's Letter. 3

C. The Bidar Incident. 4

D. The Bainbridge Township Board of Trustees' Letter. 4

E. CEI's Response Letter. 5

F. Mr. Link's Collision. 5

G. CEI's Internal Chaos. 6

H. CEI Failed to Abide by Their Own Internal Standards and Legal Opinion. 7

I. The Geauga County Highway Use Manual. 8

J. The Geauga County Engineer and Bainbridge Township's Rejection of the Utility Pole Locations. 9

II. RELEVANT PROCEDURAL HISTORY 11

III. RELOCATION OF THE POLES 13

ARGUMENT 14

PROPOSITION OF LAW NO. I: A UTILITY COMPANY DOES NOT HAVE UNFETTERED DISCRETION TO PLACE AND MAINTAIN UTILITY POLES WITHIN UNINCORPORATED TOWNSHIPS PURSUANT TO R.C. 4931.03. 14

A. Utility Companies Do Not Have Unfettered Discretion in the Placement and Maintenance of Their Utility Poles. 14

B. *Turner* Does Not Provide Immunity to CEI. 17

C. The Court of Appeals Appropriately Set Forth Why *Turner* Does Not Apply to CEI… 21

D. A Utilities Privilege to Maintain Poles Within the Right-of-Way is Subordinate to the Rights of the Public. 22

E. Revised Code 4931.03 Does Not Grant CEI Carte Blanche Authority to Maintain Utility Poles Alongside Roadways in Unincorporated Townships After Road Reconstruction Projects. 28

CONCLUSION 33

CERTIFICATE OF SERVICE 34

APPENDIX 35

TABLE OF AUTHORITIES

Cases

AT&T Corp. v. City of Toledo, 351 F.Supp.2d 744 (N.D. Ohio 2005)..... 23

AT&T Corp. v. Lucas Cty., 381 F.Supp.2d 714 (N.D. Ohio 2005) 23

Bd. of Bainbridge Twp. Trustees v. Funtime, Inc., 55 Ohio St.3d 106 (Ohio 1990) 25

Cambridge Home Tel. Co. v. Harrington, 127 Ohio St. 1 (Ohio 1933) 18

Columbus Gas Light & Coke Co. v. City of Columbus, 50 Ohio St. 65 (Ohio 1893)..... 23, 24

Dunlap v. W.L. Logan Trucking Co., 2005-Ohio-2386 (10th Dist. 2005)..... 31

Ganz v. Ohio Postal Tel. Cable Co., 140 F. 692 (6th Cir. 1905)..... 23

Link v. FirstEnergy Corp., 2014-Ohio-5432 (8th Dist. 2014) 22

New Orleans Gas Light Co. v. Drainage Comm'n of New Orleans, 197 U.S. 453 (1905) 23

Ohio Postal Tel.-Cable Co. v. Yant, 64 Ohio App. 189 (5th Dist. 1940) 18

Perrysburg v. Toledo Edison Co., 2007-Ohio-1327 (6th Dist. 2007)..... 14, 22

Tennessee v. United States, 256 F.2d 244 (6th Cir. 1958)..... 22, 24

Toledo Edison Co. v. Bd. of Defiance Cty. Commrs., 138 Ohio St.3d 1471, 2014-Ohio-1674 (Ohio 2014)..... 15, 22

Toledo Edison Co. v. Bd. of Defiance Cty. Commrs., 2013-Ohio-5374 (3rd Dist. 2013)15, 22, 26, 27

Torok v. Jones, 5 Ohio St.3d 31 (Ohio 1983) 25

Turner v. Ohio Bell Tel. Co., 118 Ohio St.3d 215, 2008-Ohio-2010 (Ohio 2008)..... 14, 15, 18, 26

Statutes

O.A.C. 3701-53-05 6

R.C. 1723.02 29

R.C. 2903.11 31

R.C. 2903.13 31

R.C. 4511.01 14

R.C. 4513.34 29

R.C. 4931.03 ..... 28, 29, 32

R.C. 4933.14 28

R.C. 5543.09 19

R.C. 5543.16 29

R.C. 5547.01 29

R.C. 5571.01 25

R.C. 5571.02 ..... 4, 25

R.C. 5571.05 ..... 19, 25

STATEMENT OF FACTS

I. RELEVANT FACTUAL HISTORY

A. The Savage Road Reconstruction and Widening Project.

1. Passage of Resolutions of Convenience and Necessity.

On May 8, 2006, the Bainbridge Township Board of Trustees unanimously passed a resolution of convenience and necessity for the improvement and widening of the entire length of Savage Road in Bainbridge Township, Ohio. (Tr. at 566-568; Appx. at 1).[1] The Cleveland Electric Illuminating Company and FirstEnergy Service Company (collectively referred to herein as "CEI") were notified of the Savage Road project and sent preliminary road reconstruction project plans in late 2006 by the Geauga County Engineer's Office. (Tr. at 533).

On April 2, 2008, CEI was sent final road reconstruction project plans and informed that the project was expected to commence in late July or early August, 2008. (Tr. at 533; Ex. 7).[2] On June 23, 2008, the Bainbridge Township Board of Trustees unanimously passed a second resolution ordering the reconstruction of Savage Road, and approving the County Engineer's road reconstruction plans. (Tr. at 569; Appx. at 2). The Geauga County Engineer continued to serve as the project manager for the Savage Road widening project throughout the reconstruction. (Tr. at 362, 531, 568).

2. The Preconstruction Meeting and Transmittal of the Original Pole Relocation Plans.

Soon thereafter, on August 22, 2008, a preconstruction meeting was held with the relevant contractors to discuss how the Savage Road project would proceed. (Tr. at 505). CEI

[1] "Tr." shall refer to the corresponding page of the trial transcript. "Appx." shall refer to the corresponding page of the appendix.

[2] "Ex." shall refer to the corresponding exhibit number/letter introduced at trial.

was duly notified and invited to such meeting; however, no representative from CEI attended the meeting. (Tr. at 505, 535).

On or about September 24, 2008, CEI sent the Geauga County Engineer's Office a letter acknowledging that it had utility poles in conflict with the Savage Road reconstruction project and that it was ***required*** to rearrange them. (Ex. 10).

On October 30, 2008, CEI transmitted its original utility pole relocation plans for Savage Road to the Geauga County Engineer's Office (such plans were dated October 14, 2008). (Tr. at 506). These original plans called for the relocation of about fifty (50) utility poles, including the one that Mr. Link struck. (Tr. at 363-364; Ex. 11). The Geauga County Engineer's Office approved these original plans.

3. CEI's Abandonment of the Project.

In accordance with the approved plans, prior to the winter of 2008-2009, CEI relocated a majority of the utility poles along Savage Road; however, it failed to relocate eight (8) utility poles along the west side of the roadway. (Tr. at 538). These remaining utility poles were in the Savage Road public right-of-way; were located within the ditch line; some of these poles leaned ominously towards the roadway; they were in close proximity to the roadway; and they were in the clear zone of Savage Road. The "clear zone" refers to the required unobstructed area along a roadway, outside the edge of the traveled way, necessary for the safe recovery of vehicles that have left the traveled way.

Savage Road remained closed for the winter since the utility pole relocation project was not completed, and based upon assurances from CEI that the project would be finished over the winter pursuant to the original plans. (Tr. at 538-539). Months went by where CEI did not show up to Savage Road to complete the project.

The reason that CEI failed to complete the project was due to its failure to appropriately

budget for it, and on March 2, 2009, CEI sent the Geauga County Engineer an unsolicited set of revised plans, which called for no further work to take place and the non-relocated poles to remain in their current positions. (Tr. at 540-541; Ex. 14). The Geauga County Engineer's Office and Bainbridge Township Trustees expressly rejected these revised plans since they did not address the clear zone of the roadway. (Tr. at 541, 577). It would have cost CEI a nominal amount compared to the entire project to relocate these remaining eight (8) utility poles.

B. <u>The Geauga County Engineer's Letter</u>.

On March 26, 2009, the Geauga County Engineer sent CEI a letter concerning the project. The letter stated the following, in pertinent part:

> The subject reconstruction project design was started in 2007. Since the middle of 2007, this office has sent several sets of plans to various individuals at FirstEnergy.[3] With all your internal changes, we appear to have difficulty finding the correct contact person. Additionally, your internal system appears not to work, as plans are often misplaced and not delivered to the correct person. As late as August 2008, we were still being told by the new contact person that FirstEnergy did not have any plans from the Geauga County Engineer while other individuals at FirstEnergy had current sets of plans.
>
> All of this aside, on October 30, 2008, we received an E-Mail containing a set of plans to move all the necessary poles on Savage Road … It was our understanding this work would be done over the winter, so the contractor for the road project could complete his ditching work in the spring. The township has kept the road closed since the start of the road project to protect not only the driving public, but also their and your tort liability.
>
> On March 2, 2009, we received a revised set of plans that does not address the clear zone of the roadway. In some cases the poles are in the ditch line and may not have enough cover, in other areas, poles are in front of the ditch and only four to six feet off the edge of the pavement. ***I would think this is a liability First Energy does not want to absorb and I know this is a liability the township will not allow to exist on a public road***.
>
> As Project Manager for the township road reconstruction project, I am requesting your review of this project with the hope you will agree that ***it is in the best interest of everyone that First Energy completes the October 2008 plan in a timely fashion and provide a safe, clear zone for the roadway***. (Emphasis added.)

[3] FirstEnergy is an affiliate of CEI.

(Ex. 3).

CEI was not responsive to the Geauga County Engineer's concerns in the above letter.

C. <u>The Bidar Incident</u>.

On May 23, 2010, David Bidar was driving his motor vehicle on Savage Road when a deer darted into the roadway. *Bidar v. Cleveland Elec. Illum. Co.*, 2012-Ohio-3686 (8th Dist. 2012), ¶2, *review denied, Bidar v. Cleveland Elec. Illum. Co.*, 2013-Ohio-347 (Ohio 2013). Mr. Bidar swerved to avoid striking the deer and crashed into one of the remaining utility poles that had not been relocated by CEI, and was injured. *Id.* CEI was notified of this incident on May 27, 2010.

D. <u>The Bainbridge Township Board of Trustees' Letter</u>.

Shortly after the Bidar motor vehicle accident, on June 10, 2010, Bainbridge Township, through its township highway superintendent,[4] invited and met with a representative from CEI at the Savage Road project to demonstrate the dangers the poles presented. (Tr. at 408-409). At such meeting the Bainbridge Township highway superintendent demanded that the remaining poles be relocated outward in compliance with the original plans. (Tr. at 409). Despite this demand and knowledge of the Bidar incident, CEI still refused to relocate the remaining poles. *Id.*

On June 24, 2010, the Bainbridge Township Board of Trustees sent CEI a letter. The letter was unanimously approved by all three (3) members of the Bainbridge Township Board of Trustees prior to transmittal just as any resolution would be. Such letter stated the following, in pertinent part:

> The Bainbridge Township Board of Trustees is contacting you directly, as our efforts through standard channels have been largely ineffective. We are

[4] R.C. 5571.02(C) provides that the board of township trustees may appoint some competent person, not a member of the board of township trustees, to have charge of maintenance and repair of roads within the township, who shall be known as "township highway superintendent" and shall serve at the pleasure of the board.

> concerned about the location of a specific set of utility poles on Savage Road in Bainbridge Township. As a result of a road widening project in 2008-2009, some utility poles were relocated by your company while others were left in place. We were informed that CEI would complete the relocation of the remaining eight poles in 2010.
>
> A car recently struck one of the poles that was to be relocated. Thankfully, no one was seriously injured. ***It is apparent that safety dictates the relocation of these poles to an adequate distance from the roadway and in line with the other poles on Savage Road***.
>
> We would like a resolution of this issue with CEI as soon as possible and before there are any further accidents. ***We look forward to your prompt notification of the schedule for relocating the poles***.
>
> (Ex. 4).

E. <u>CEI's Response Letter</u>.

CEI did not respond to Bainbridge Township's letter for almost three months, and when the response was finally received by the Township on September 13, 2010, it provided that CEI independently decided not to relocate the remaining utility poles; that CEI does not relocate poles for clear zone; and that any further relocations would have to be at the Township's sole cost and expense. (Tr. at 456-462).

Only twenty-five (25) days after the Township's receipt of CEI's letter, Mr. Link's incident occurred.

F. <u>Mr. Link's Collision</u>.

On October 8, 2010, at around 10:00 p.m., Mr. Douglas V. Link was travelling southbound on Savage Road in Bainbridge Township, Ohio, on his motorcycle. (Tr. at 651). Suddenly and unexpectedly, a white tail buck darted across Savage Road, and struck Mr. Link under his left arm causing him to veer towards the right side of the road. (Tr. at 651-652). Mr. Link used his best efforts to try and maintain control of the motorcycle; however struck one of the utility poles owned, maintained and controlled by CEI, which they refused to relocate. (Tr. at 652, 903, 905).

Mr. Link's collision with the utility pole caused catastrophic and permanent injury to his right leg and pelvis whereby he has lost the use of his entire leg and suffers from permanent and debilitating pain. (Tr. at 656-657).

Any allegations of intoxication are irrelevant to the Court's analysis as the jury previously addressed this issue in a comparative fault analysis which is not subject to this appeal. Furthermore, all witnesses, including the first responders trained to identify intoxicated persons, testified that there were no signs of alcohol impairment. (Tr. at 984-985, 1012, 1041, 1099-1100, 1116-1117, 1134-1135, 1153-1154). Lastly, the blood test was defective for a number of reasons, including the usage of alcohol as a skin antiseptic by the hospital when making the blood draw. (Tr. at 1477, 1483; Ex. C; *See* O.A.C. 3701-53-05).

G. <u>CEI's Internal Chaos</u>.

A portion of the blame in this matter rests upon the internal chaos going on within CEI during the time of the Savage Road project. The Geauga County Engineer and the Bainbridge Township Board of Trustees both mentioned the inability to contact CEI representatives through standard channels, and that CEI's internal systems appeared to be broken. (Exs. 3 and 4). When referring to CEI's ability to communicate with its own affiliate, FirstEnergy Service Company ("FESC"), FESC's own employee admitted that "the left hand doesn't know what the right hand is doing." (Tr. at 450-451). When discussing the Savage Road project with other employees, a FESC employee stated that "[t]he project changed a number of hands over the last two years. Too many emails are floating around and not enough clarity." (Tr. at 439). Another employee stated that rather than taking action to make the project "right" she was "[p]raying that no accidents occur." (Tr. at 370-371).

Additionally, there was a clear zone philosophy change by CEI management during the Savage Road project. (Tr. at 373). This philosophy change shifted constructing poles based

upon least cost as a prevailing factor as opposed to the health, safety and welfare of others. *Id.*

The underlying reason for CEI abandoning the Savage Road project was their failure to appropriately budget the project. (Tr. at 438). CEI employees' admitted to the Geauga County Engineer's Office that it was strictly a financial decision. (Tr. at 512).

CEI never considered the potential harms the remaining poles posed when making its decision to abandon the Savage Road project. (Tr. at 436, 462). In fact, CEI deemed the pole locations safe even after the Bidar and Link incidents. (Tr. at 415). This was despite the fact that CEI had been notified of the potential risks the poles posed by the Geauga County Engineer, the Bainbridge Township Board of Trustees, and the Bainbridge Township highway superintendent who suggested that there could be fatalities or major injuries as a result of CEI not relocating the remaining poles. (Tr. at 374).

H. <u>CEI Failed to Abide by Their Own Internal Standards and Legal Opinion</u>.

CEI's own internal design standards provide that the minimum horizontal clearance for utility poles on Savage Road is required to be nineteen (19) feet. (Tr. at 236-237, 255, 302). Consequently, poles are required to be positioned at least nineteen (19) feet away from the edge of the roadway. Arthur Stitt, a CEI employee, made certain measurements involving the utility pole that Mr. Link struck. Mr. Stitt determined that the pole is 6 feet, 3.6 inches from the edge of the pavement, and 8 feet, 2.4 inches from the edge of the white line. (Tr. at 257). Obviously, the subject pole did not meet, or come close to complying with, CEI's own internal design standards.

Further, CEI's internal construction standards provide that "[n]ew highways and roads ***require*** application of the ODOT Location & Design Utility Manual to determine proper clear recovery zone. Consult with governmental authority exercising jurisdictional rights to determine proper clearances." (Tr. at 277; Ex. 27). The Ohio Department of Transportation ("ODOT") Location & Design Utility Manual provides for a clear zone distance of seventeen (17) to

twenty-three (23) feet on Savage Road depending on grade, a distance which was also clearly not met by CEI. (Tr. at 241, 303).

Ralph Delligatti, engineering supervisor for CEI, testified that "if utility facilities can be relocated to meet the clear zone guideline as one safety improvement in conjunction with other roadway improvements that is the expectation." (Tr. at 316). Based upon Mr. Delligatti's review of the Savage Road project he stated that "I think it remains true that existing pole locations do not satisfy the clear zone ***requirement*** with respect to the roadway improvement, and that some of them are as close as two feet-ten inches to the relocated [edge of pavement]." (Tr. at 335).

Also, despite CEI's knowledge that public works projects are not compensable, it demanded that Bainbridge Township pay for any further utility pole relocations. (Ex. 5). Further, there was evidence to suggest that CEI's actions contradicted their own internal legal opinion regarding the relocation of the remaining poles along Savage Road. An employee stated that "I'm not sure we have an out" after reading the legal opinion. (Tr. at 451-452).

I. <u>The Geauga County Highway Use Manual</u>.

The Geauga County Commissioners Highway Use Manual (the "Highway Use Manual") was adopted into law by a resolution passed by the Geauga County Board of Commissioners on April 28, 2005. (Tr.d. at 64; Tr. at 542-543; Appx. at 3-14).[5] The Highway Use Manual provides that "[d]esign of the several elements in utility crossings or occupancies ***shall*** conform to the ***requirements*** contained herein, but where State, Local and Industry design standards are higher than the treatments and design requirements specified the higher standards shall be used." (Tr. at 544; Appx. at 21). As set forth above, CEI not only failed to comply with their own internal standards for clear zone, they failed to comply with the ODOT requirements. CEI also

[5] "Tr.d." shall refer to the corresponding entry on the Pagination of the Record.

failed to comply with the American Association of State Highway and Transportation Officials' ("AASHTO") standards.

The Highway Use Manual also states that "[a]ny deviations from the approved plan ***must*** be approved by the Geauga County Engineer prior to installation." (Tr. at 545; Appx. at 26). In this case, CEI's original plans were approved; however, the revised plan reflecting the non-relocation of the pole that Mr. Link struck was expressly rejected. (Tr. at 541, 546).

The Highway Use Manual also provides that "[t]he design of the utility facilities ***shall*** conform to guidelines contained herein, but where Local and Industry standards are higher than specified herein, Local or Industry standards ***shall*** prevail. (Tr. at 546; Appx. at 29). On that basis, the ODOT *Procedure for Utility Relocations* provides that "[a]ll utility relocation plans covering above-ground facilities ***must be*** reviewed against the clear zone requirements of the project." (Tr. at 515). Despite the fact that the language within the Highway Use Manual and ODOT procedure is mandatory, not discretionary, CEI failed to adhere to the requisite clear zone requirements.

J. <u>The Geauga County Engineer and Bainbridge Township's Rejection of the Utility Pole Locations</u>.

Bainbridge Township and the Geauga County Engineer's Office expressly rejected CEI's revised plans. When asked whether CEI was obligated to relocate the remaining poles, Jeffrey Markley, the chairman of the Bainbridge Board of Trustees, testified:

Q: And were [CEI and FirstEnergy] obligated to relocate those poles?

A: Yes.

Q: And has that changed in any way, shape, or form as you sit here today?

A: No.

(Tr. at 571).

When Mr. Markley was asked about whether Bainbridge Township rejected CEI's

revised plan to abandon the project, he testified as follows:

Q: Did the board approve the remaining poles --

A: To remain in place?

Q: Correct.

A: No.

Q: [ ] Did the board disapprove those remaining poles to remain in place?

A: Yes.

Q: And what is the board's current position related to the remaining poles on Savage Road?

A: We still expect them to be moved.

***

Q: [ ] Now, did the board of trustees ever approve or agree with FirstEnergy's decision to not relocate those remaining poles?

A: It did not.

(Tr. at 571, 577-578).

When asked about the revised plans, Robert Phillips, the Geauga County Engineer at the time of the Savage Road project, testified as follows:

Q: [ ] At the time you received the revised plans, did you approve them?

A: No.

Q: And tell the ladies and gentlemen of the jury why you did not approve them?

A: They had basically been changed to reflect the work that had been done, with the future work that we anticipated not being done.

***

Q: [ ] Why is it that you did not approve the revised plans?

A: There were a number of poles that were in close proximity to the new pavement, and many of them were in front of the ditch line. We felt they all needed to be moved to the back of the right-of-way.

(Tr. at 541).

II. RELEVANT PROCEDURAL HISTORY

On December 10, 2010, Douglas Link and Diane Link filed a Complaint against FirstEnergy Corp. and CEI asserting claims for negligence, negligence *per se*, absolute and/or qualified nuisance, loss of consortium and punitive damages. (Tr.d. at 1). On January 25, 2011, CEI filed an answer to the Complaint, and on April 11, 2011, FirstEnergy Corp. filed its answer. (Tr.d. at 11, 18).

On May 11, 2011, CEI and FirstEnergy Corp. filed motions for summary judgment relying upon *Turner v. Ohio Bell Tel. Co.*, 118 Ohio St.3d 215, 220, 2008-Ohio-2010 (Ohio 2008). (Tr.d. at 19-20). These motions were fully briefed and subsequently denied by the trial court on October 7, 2011. (Tr.d. at 56). CEI and FirstEnergy Corp. requested that the trial court reconsider the summary judgment denials on October 28, 2011, again citing to *Turner*. (Tr.d. at 59-60). After reconsideration, the trial court declined to reverse its prior ruling, stating that "genuine issue[s] of material fact continue to exist as to whether the defendants had permission from the Bainbridge Township Board of Trustees and Geauga County Engineer's Office to maintain the subject [utility] pole in its current location during the widening and improvement of Savage Road." (Tr.d. at 70).

On June 15, 2011, Mr. and Mrs. Link sought leave to amend their Complaint based upon newly discovered evidence that FirstEnergy Service Company had culpability herein. (Tr.d. at 31). On April 12, 2012, the trial court granted the request to add FirstEnergy Service Company to the case, and the complaint was amended accordingly. (Tr.d. at 74, 76). An answer was filed by FESC on April 30, 2012. (Tr.d. at 83).

Despite the Eighth District's holding on August 16, 2012, in *Bidar v. Cleveland Elec. Illum. Co.*, 2012-Ohio-3686 (8th Dist. 2012), FirstEnergy Corp., FESC and CEI again filed motions for summary judgment on September 14, 2012, relying upon *Turner*. (Tr.d. at 84-86).

The trial court again denied summary judgment (Tr.d. at 88, 102, 147-148).

Trial commenced on January 23, 2013. (Tr.d. at 101; Tr. at 6). At the close of Mr. and Mrs. Link's case, CEI, FirstEnergy Corp. and FESC moved for a directed verdict on a number of grounds, including reliance upon *Turner*. (Tr. at 1227-1233). After consideration, the trial court granted the directed verdict as it related to FirstEnergy Corp. on all counts. (Tr. at 1294). The trial court found that FirstEnergy Corp. was merely a holding company, and therefore there was insufficient evidence linking FirstEnergy Corp. to the actions taken in this case. *Id.* The trial court also directed a verdict with respect to the absolute nuisance claim finding that maintaining a pole was not an abnormally dangerous condition that cannot be maintained without injury regardless of care. (Tr. at 1295). The court reserved ruling with respect to Mr. and Mrs. Link's punitive damages claim, and denied the motion for directed verdict on the claims for qualified nuisance and negligence with respect to CEI and FESC. (Tr. at 1296). CEI and FESC renewed their motions for directed verdict at the close of their case. (Tr. at 1529-1530). The trial court again denied the motions related to the claims for negligence and qualified nuisance as against CEI and FESC; however, granted the motion for directed verdict concerning the claim for punitive damages. (Tr. at 1542-1543).

After deliberating, the jury returned a verdict in favor of Mr. and Mrs. Link on their claims for qualified nuisance and loss of consortium. (Tr.d. at 162).

On February 21, 2013, CEI and FESC filed a motion for judgment notwithstanding the verdict ("JNOV"), again relying substantially on *Turner*. (Tr.d. at 165). The JNOV was denied on July 26, 2013, and an appeal ensued. (Tr.d. at 177-178).

On appeal, the Eighth District Court of Appeals affirmed Mr. and Mrs. Link's jury verdicts and granted them an additional hearing on punitive damages. The court concluded that CEI did not have the requisite permission to keep the pole Mr. Link struck in its original location

after completion of the Savage Road widening project, and accordingly, CEI cannot rely on *Turner* as a shield from liability. *Link v. FirstEnergy Corp*., 2014-Ohio-5432 (8th Dist. 2014).

III. RELOCATION OF THE POLES

After the jury verdict in Mr. and Mrs. Link's case, the Geauga County Prosecutor's Office commenced investigating CEI for violations of the Ohio criminal code, including the felonious assault statute, arising out of the *Bidar* and *Link* incidents. Upon information and belief, after grand jury subpoenas were served on CEI a deal was reached, whereby CEI would relocate the remaining eight (8) utility poles in lieu of being criminally prosecuted. Soon thereafter, the remaining poles were relocated in compliance with the original pole relocation plans.

ARGUMENT

PROPOSITION OF LAW NO. I: A UTILITY COMPANY DOES NOT HAVE UNFETTERED DISCRETION TO PLACE AND MAINTAIN UTILITY POLES WITHIN UNINCORPORATED TOWNSHIPS PURSUANT TO R.C. 4931.03.

A. Utility Companies Do Not Have Unfettered Discretion in the Placement and Maintenance of Their Utility Poles.

The importance of energy transmission throughout the state of Ohio through the utilization of utility poles is recognized; however, this permissive right is not absolute since utility companies "do not enjoy unfettered discretion in the placement of their poles within the right-of-way." *Turner v. Ohio Bell Tel. Co.*, 118 Ohio St.3d 215, 220, 2008-Ohio-2010 (Ohio 2008). Essentially, utility companies are granted a permissive property right by the government, free of charge, in which to locate and maintain their facilities. However, the placement of a utility pole along a roadway does not create an irrevocable right to have such pole remain forever in the same place. *See Perrysburg v. Toledo Edison Co.*, 2007-Ohio-1327 (6th Dist. 2007). A utility company may be required to ***relocate*** its poles at its own expense when such relocation is demanded by public necessity and for public safety and welfare. *Id*

Following CEI's argument to its most logical conclusion, it contends that it may place and maintain utility poles anywhere it pleases within public right-of-ways[6] unless a utility pole is located within the roadway itself. If CEI's position were adopted by this Court, utility companies would be permitted to place and maintain utility poles abutting township roadways, thereby placing the health, safety and welfare of the users of the roadway at risk. CEI is clearly misinterpreting and misapplying the *Turner* decision.

[6] R.C. 4511.01(UU)(2) defines "right-of-way" as "[a] general term denoting land, property, or the interest therein, usually in the configuration of a strip, acquired for or devoted to transportation purposes. When used in this context, right-of-way includes the roadway, shoulders or berm, ditch, and slopes extending to the right-of-way limits under the control of the state or local authority."

The limited immunity *Turner* provided is not applicable to CEI in this matter since utilities are "required to obtain approval from the owner of the right-of-way, *i.e.* the public authority" for *Turner* to apply. *Turner v. Ohio Bell Tel. Co.*, 2008-Ohio-2010, at ¶¶ 7, 20. In this case, no approval was obtained from the project manager, the Geauga County Engineer's Office, or the owner of the right-of-way, Bainbridge Township, for CEI to maintain the remaining utility poles so dangerously close to the edge of the roadway after the Savage Road widening and reconstruction project. Furthermore, CEI did not possess any permits, easements, agreements, leases or contracts which permitted it to maintain the subject utility pole along Savage Road. In *Turner*, the utility had an ODOT permit for the subject pole.

The advancement of CEI's position would likely have a devastating impact on the citizens of Ohio. CEI has taken the untenable position that they are permitted to install and maintain utility poles anywhere they please within township right-of-ways unless a utility pole is, or would be, located within the paved roadway. If they are permitted to take such a position, it will inevitably lead to utility poles being in extreme close proximities to throughways in townships, which will no doubt result in further serious injuries and fatalities for those utilizing such roadways. It would also abrogate the "clear zone" requirements as promulgated by ODOT, county engineers and other legislative authorities.

Furthermore, a Township resolution of disapproval for a particular pole is not required to revoke permission. Requiring townships to identify disapproved poles through resolution will be unwieldy and lead to unnecessary widespread litigation as it did in *Toledo Edison Co. v. Bd. of Defiance Cty. Commrs.*, 2013-Ohio-5374 (3rd Dist. 2013), *review denied*, *Toledo Edison Co. v. Bd. of Defiance Cty. Commrs.*, 138 Ohio St.3d 1471, 2014-Ohio-1674 (Ohio 2014). Moreover, a resolution was not necessary in this instance since the Township had previously agreed to a pole relocation plan with CEI to relocate all of the poles along Savage Road, and CEI had previously

conceded on a number of occasions that it was required to relocate the remaining poles. Specifically, CEI sent the Geauga County Engineer a letter stating that CEI "has facilities in conflict and will be required to rearrange them." (Ex. 10). Thereafter, CEI submitted pole relocations plans to the Geauga County Engineer, which were approved, that called for the relocation of the pole that Mr. Link struck. Consequently, CEI was contractually obligated to relocate the poles. There were also further assurances from CEI that the poles would be moved.

Notwithstanding the foregoing, a resolution was passed by Bainbridge Township that provided that:

- [T]he public convenience and welfare require the improvement of the entire length of Savage Road.
- [T]he Board of Township Trustees of Bainbridge Township has reviewed the plans, profiles, cross sections, estimates and specifications and finds them acceptable.
- [T]he Board of Township Trustees of Bainbridge Township is satisfied that the public convenience and welfare require the proposed improvement of Savage Road.

(Ex. 8).

Such resolution was passed prior to CEI's "revised plans" indicating its intention to abandon the project. Requiring the Township to pass a separate resolution providing that the locations of certain poles were impermissible after CEI has already agreed to relocate such poles is unreasonable. Such a condition for liability to exist herein is not rationale in light of the facts. CEI should be estopped from making such an argument based upon their multiple representations, both written and verbal, that they would complete the Savage Road project in compliance with the original plans. Moreover, the Township and County Engineer's actions and communications were a clear indication to CEI that they lacked permission to maintain the remaining poles in the right-of-way.

Here, not only is there correspondence and communications from the County Engineer and the Township rejecting placement of certain poles, but you also have a number of further

violations of applicable law, including violations of ODOT requirements and the Geauga County Highway Use Manual, which was adopted through resolution by the Geauga County Commissioners. For the limited immunity set forth in *Turner* to apply, the public authorities must grant permission and approval for the location of the pole since they are the parties in the better position to do so. *Id.* at ¶20.

CEI's purported doomsday scenario whereby utilities would have to undertake a costly and burdensome survey of poles over tens of thousands of miles of Ohio's unincorporated townships is illogical. The factual context of both *Bidar* and *Link* involve CEI's actions during a road reconstruction and widening project. At the commencement of any new road construction or reconstruction project, utilities are required to comply with the standards and requirements set forth by ODOT, the manager of the project and the owner of the right of way. The *Link* case requires no further obligation or responsibility on the utility than already exists. For utility poles along township roadways that are not being constructed, utilities have no additional burden. If the utility has a pole along a roadway in a township that has been in place for decades, there is no reason for the utility to undertake a survey whether it has prior permission to maintain the pole unless there is evidence to suggest that the placement of that pole has been rejected. Utilities are always required to obtain approval and permission for pole locations in the context of road widening and reconstruction projects. Shielding utilities from such obligation will ultimately result in poles being extremely close to roadways after widening projects, at the cost of safety to the public.

B. *Turner* Does Not Provide Immunity to CEI.

Turner is easily distinguishable from the present matter. The most glaring difference in *Turner* is that the utility pole therein was erected pursuant to a permit issued by ODOT, and therefore the applicable public authority had approved the pole location. *See Turner v. Ohio Bell*

Tel. Co., 2008-Ohio-2010, at ¶26. CEI did not possess any permits, easements, agreements, leases or contracts which permitted it to maintain the subject utility pole along Savage Road. Additionally, the applicable public authorities expressly disavowed the location of the pole that Mr. Link struck. There are further factual dissimilarities between *Turner* and this case, including the fact that the operator of the motor vehicle in *Turner* was speeding (between 55 and 59 mph in a posted 45 mph zone) and was convicted of vehicular manslaughter. *Id.* at ¶1. There was no evidence suggesting that Mr. Link was speeding, and he was never charged with any traffic or criminal offense.

This Court set forth the history of utility pole placement in *Turner* when it stated:

> Public utility companies have enjoyed at least a qualified right to place utility poles within the right-of-way of public roads since 1847. *See* 45 Ohio Laws 34 (permitting erection of telegraph poles and related fixtures along public roads and highways). This right was initially limited by a single condition: that the utility poles not incommode the public in the use of the roads or highways. *Id*. Today, before erecting poles or other fixtures on a public right-of-way, a utility company is generally ***required to obtain the approval of the public entity that owns the right-of-way***.
>
> *Id.* at ¶7.

Also, notably, *Turner* identified the following case history regarding motor vehicle – utility pole collisions:

- The traveling public has a right to the use of a public highway, to the entire width of the right-of-way, as against all other persons using such highway for private purposes. *Cambridge Home Tel. Co. v. Harrington*, 127 Ohio St. 1 (Ohio 1933), syllabus.

- If utilities place 'posts, piers and abutments' within the right-of-way of the highway, they must not prejudice the superior rights of the traveling public by the location and maintenance of such posts, piers or abutments. *Cambridge Home Tel. Co. v. Harrington*, 127 Ohio St. 1 (Ohio 1933), syllabus.

- Emergencies may arise where the use of the public highway which is not dedicated, improved and made passable for vehicular use is permissive. *Ohio Postal Tel.-Cable Co. v. Yant*, 64 Ohio App. 189 (5th Dist. 1940).

Turner v. Ohio Bell Tel. Co., 2008-Ohio-2010, at ¶¶ 8-12.

This Court held in *Turner* "that when a vehicle collides with a utility pole located off the improved portion of the roadway but within the right-of-way, a public utility is not liable, as a matter of law, if the utility has obtained any necessary permission to install the pole and the pole does not interfere with the usual and ordinary course of travel." *Id. at* ¶21. However, this limited immunity was conditioned upon the utility having approval for the location of the utility pole from the owner of the right of way. The Court specifically stated: "Nevertheless, utility companies do not enjoy unfettered discretion in the placement of their poles within the right-of-way, for ***they are required to obtain approval from the owner of the right-of-way***… The appropriate public authority presumably will consider many of the factors in the Eight[h] District's reasonableness test when deciding whether to approve a pole location." *Id.* at ¶20. Those factors include (1) the narrowness and general contours of the road, (2) the presence of sharp curves in the road, (3) the illumination of the pole, (4) any warning signs of the placement of the pole, (5) the presence or absence of reflective markers, (6) the proximity of the pole to the highway, (7) whether the utility company had notice of previous accidents at the location of the pole, and (8) the availability of less dangerous locations. *Id.* at ¶15. (Emphasis added).

In this case, since CEI failed to obtain approval from the appropriate public authorities for the locations of the remaining poles after the road reconstruction and widening project, they cannot be afforded the protection that *Turner* provides.

The Geauga County Engineer served as the project manager for the Savage Road project, not only through the resolutions passed, but also by statute. Pursuant to R.C. 5543.09(A), the county engineer shall supervise the construction, reconstruction, resurfacing, and improvement of public roads by boards of township trustees under the Revised Code. (Appx. at 63). Further, R.C. 5571.05 provides that "[i]n the maintenance and repair of roads, the board of township trustees … shall be subject to the general supervision and direction of the county engineer. Such

board of township trustees shall follow the direction of the engineer as to methods to be followed in making repairs." (Appx. at 64).

In this case, not only does the Geauga County Engineer's letter to CEI express his disapproval of the locations of the remaining poles, but his testimony at trial reflects the same condemnation. The County Engineer's letter provided that "[a]s Project Manager for the township road reconstruction project, I am requesting your review of this project with the hope you will agree that it is in the best interest of everyone that First Energy completes the [original] plan in a timely fashion and provide a safe, clear zone for the roadway." (Ex. 3). The letter also stated that the revised plans created a "***liability the township will not allow to exist on a public road***," as well as a "liability" the engineer thought FirstEnergy would not want to absorb. *Id.* Additionally, the County Engineer testified that he never approved CEI's revised plans (which was a reflection of CEI's abandonment of the project) because there were a number of poles that were in close proximity to the new pavement. (Tr. at 541).

Moreover, once the duty of coordinating with CEI was delegated to Bainbridge Township, the Trustees' letter stated that "[i]t is apparent that ***safety dictates the relocation of these poles*** to an adequate distance from the roadway and in line with other poles on Savage Road … We look forward to your prompt notification of the schedule for relocating the poles." (Ex. 4). The chairman of the Board of Trustees' testimony further reflected Bainbridge Township's disapproval of CEI's actions. The chairman, Jeffrey Markley, testified that CEI was still obligated to relocate the subject poles, and that the Board expressly disapproved the locations of the remaining poles. (Tr. at 571, 577-578). Lastly, the Bainbridge Township highway superintendent demanded that the poles be relocated outward to avoid further catastrophic injuries or fatalities. (Tr. at 374, 409).

Consequently, CEI failed to obtain the requisite permission and approval to maintain the

pole that Mr. Link struck from the appropriate public authorities, and therefore CEI is not entitled to the limited immunity that *Turner* provides.

C. **The Court of Appeals Appropriately Set Forth Why *Turner* Does Not Apply to CEI.**

The Eighth District Court of Appeals has dealt with whether *Turner* applies to CEI in two separate pole collision accidents on Savage Road – *Bidar* and *Link.* In *Bidar v. Cleveland Elec. Illum. Co.,* 2012-Ohio-3686 (8th Dist. 2012), *review denied, Bidar v. Cleveland Elec. Illum. Co.*, 2013-Ohio-347 (Ohio 2013), the court determined that "[n]o permission was granted by any public authority" and thus CEI was not entitled to summary judgment under *Turner*. *Id.* at ¶17. *Bidar* involved nearly identical facts as the case at bar. In May 2010, David Bidar was driving on Savage Road in Bainbridge Township when a deer darted into the roadway. *Id.* at ¶2. Mr. Bidar swerved to avoid hitting a deer and struck one of the utility poles that CEI had failed to relocate. *Id.* The trial court found that CEI was granted permission to install the pole under R.C. 4931.03(A) and 4931.14, and granted summary judgment. *Id.* at ¶3.

The court of appeals, in reversing the trial court's summary judgment decision, determined that no permission was granted. *Id.* at ¶17. In doing so, the Eighth District echoed the language in *Turner* that "utility companies do not enjoy unfettered discretion in the placement of their poles within the right-of-way, for they are required to obtain approval from the owner of the right-of-way." *Id.* at ¶10. The court went on to state that "CEI confuses a public utility's use of a public right-of-way for its lines and facilities with its placement of its lines and facilities. Use and placement are differing concepts. Although a utility's use of a public right-of-way is presumed under Ohio law, placement of a utility's lines or facilities is not unfettered." *Id.* at ¶11.

In finding that no permission was granted by any public authority, the court stated that "[i]f we were to find that permission was implied by statute, any assessment for the risk of the

pole placement would be eliminated. We decline to so find and note that the risk of the pole placement was of central concern to the Geauga County Engineers Office." *Id.* at ¶17.

Again, in *Link v. FirstEnergy Corp*., 2014-Ohio-5432 (8th Dist. 2014), the Eighth District found *Turner* inapplicable to CEI. In doing so, the court stated that "[t]he message to [CEI] was consistent and clear: the Pole needed to be relocated" and concluded that "CEI did not have the requisite permission to keep the Pole in its original location after completion of the Savage Road widening project."

Consequently, *Turner* cannot shield CEI from liability since CEI failed to obtain the necessary permissions for the location of the pole that Mr. Link struck from the applicable public authorities.

D. <u>A Utilities Privilege to Maintain Poles Within the Right-of-Way is Subordinate to the Rights of the Public</u>.

After being notified of the *Bidar* accident, CEI took the position that the Township would be obligated to pay for any further pole relocations despite CEI incurring the expense of all of the previous relocations. Traditionally, utilities have been required to bear the entire cost of relocating poles from a public right-of-way whenever requested to do so by state or local authorities. Affected utilities, facing large and unwanted expenditures, have persistently attempted to argue around or against this rule, such as in *Toledo Edison Co. v. Bd. of Defiance Cty. Commrs.*, 2013-Ohio-5374 (3rd Dist. 2013), *review denied, Toledo Edison Co. v. Bd. of Defiance Cty. Commrs.*, 138 Ohio St.3d 1471, 2014-Ohio-1674 (Ohio 2014).

Utility companies continue to fail to recognize that their right to maintain poles within the right-of-way is subordinate to the rights of the public. The right for the public to use the right-of-way is always superior to the right of a utility company to install and maintain utility poles. In *Perrysburg v. Toledo Edison Co.*, 2007-Ohio-1327 (6th Dist. 2007), the court stated, citing *Tennessee v. United States*, 256 F.2d 244, 258 (6th Cir. 1958), that:

> [T]he law is well established that a statutory, permissive right of use of public highways by public utilities is ***subordinate to the rights of the public***; that the original location of ... facilities in a public highway does not create an irrevocable right to have such poles and facilities remain forever in the same place; and that a utility company may be required to relocate its lines at its own expense when such relocation is demanded by public necessity and for public safety and welfare. *AT&T Corp. v. Lucas Cty*., 381 F.Supp.2d 714, 717 (N.D. Ohio 2005).
>
> (Emphasis added).

Deference to the public interest is in line with Supreme Court precedent on the issue. Amicus Curiae AT&T has unsuccessfully attempted to argue against such deference on a number of occasions. *See AT&T Corp. v. Lucas Cty*., 381 F.Supp.2d 714, 717 (N.D. Ohio 2005); *AT&T Corp. v. City of Toledo*, 351 F.Supp.2d 744 (N.D. Ohio 2005). In these cases, AT&T claimed that an improper taking occurred and sought reimbursement when certain municipalities compelled AT&T to relocate telecommunication lines. In denying AT&T's claims, the courts provided that the municipalities had a continuing duty and right under the police power to engage in the types of construction activities at issue for the preservation of the public health and safety, by requiring AT&T to relocate its telecommunications cable at AT&T's own expense. *See New Orleans Gas Light Co. v. Drainage Comm'n of New Orleans*, 197 U.S. 453, 460-62 (1905); *Ganz v. Ohio Postal Tel. Cable Co*., 140 F. 692, 694-96 (6th Cir. 1905); *Columbus Gas Light & Coke Co. v. City of Columbus*, 50 Ohio St. 65, 33 (Ohio 1893).

In *New Orleans*, the city contracted with a gas company, granting it a franchise to lay gas pipes under the city streets. *New Orleans*, 197 U.S. at 458. The United States Supreme Court held that the city could force the gas company to move its pipes to accommodate a drainage project, finding that "[t]he police power, in so far as its exercise is essential to the health of the community, it has been held cannot be contracted away." *New Orleans*, 197 U.S. at 460.

In *Ganz*, the Sixth Circuit held that despite the fact that the county had granted a utility, for consideration, the right to maintain telegraph poles in a certain strip of county owned land

running between a paved road and a parallel dirt road, the county could require the utility to move the poles outside that strip of land to accommodate the widening of the paved road, because the county commissioners had no right to grant an indefinite right to maintain the poles in a certain location. *Ganz*, 140 F. at 695. The court stated, "[n]o board has power to determine for all time just how a highway shall be used. The use may be changed as the new conditions demand." *Id*.

In *Gaslight & Coke*, the city had granted the gas company an easement to lay gas pipes in the city streets. *Gaslight & Coke*, 33 N.E. at 292-93. The gas company laid pipes, and the city subsequently required the pipes to be moved, so the street could be re-graded. *Id*. The gas company sued, demanding damages. This Court held that the city had a right and duty to make the streets accessible, convenient, and in good repair, and that "[t]he grant from the city must be interpreted in light of the right and duty of the city to re-grade, whenever in its judgment, the public interest demands… All such agencies [like the gas company] must be held to take their grants from the city upon the condition, implied where not expressed, that the city reserves the full and unconditional power to make any reasonable change of grade, or other improvement, in its streets. *Id*. at 293-94.

CEI's claim that its original placement of the pole in question grants it the right to maintain that pole forever in its place without any potential liability is misguided and without authority. *See Gaslight & Coke,* 33 N.E. at 294 ("An ordinance to grant an exclusive right, or a perpetual right to occupy a particular part of the street, would be an attempt to bind succeeding councils as to their exercise of legislative power, and would, for the reasons stated, be ineffectual."). Similarly, in *Tennessee v. United States*, 256 F.2d 244, 257 (6th Cir.1958), the Sixth Circuit held, in a case where a utility claimed a permanent easement to locate its telephone poles along a roadway and alleged a taking thereof, that the state could not bargain or give away

its police power to establish regulations reasonably necessary for the safety and welfare of its people.

Unlike municipalities, the police power authority of townships is not inherent, nor does it derive from a constitutional provision. *Torok v. Jones*, 5 Ohio St.3d 31 (Ohio 1983). The police power of a township is delegated by the General Assembly. *Bd. of Bainbridge Twp. Trustees v. Funtime, Inc.*, 55 Ohio St.3d 106 (Ohio 1990), paragraph one of the syllabus. As it relates to road reconstruction the General Assembly has provided townships with the following authority:

- The authority to reconstruct and repair township roads. R.C. 5571.01. (Appx. at 65-66); and
- For the board of trustees to control and maintain township roads. R.C. 5571.02. (Appx. at 67).

Township authority to repair roadways is subject to the general supervision and direction of the county engineer. R.C. 5571.05. (Appx. at 64). The township board of trustees is required to follow the direction of the engineer as to methods to be followed in making repairs. *Id.*

Moreover, R.C. 5571.02(C) provides that a township board of trustees may appoint some competent person, not a member of the board of township trustees, to have charge of maintenance and repair of roads within the township, who shall be known as "township highway superintendent" and shall serve at the pleasure of the board. In this case, the Bainbridge Township highway superintendent specifically demanded that the poles be relocated outward in compliance with the original plans, and stated that the poles were a hazard, and catastrophic injuries and fatalities could be the consequence of CEI's failure to relocate.

Consequently, Bainbridge Township and the Geauga County Engineer, as manager of the Savage Road reconstruction project, have a superior right over CEI to dictate the relocation of poles during a road reconstruction project. CEI does not have the right and authority to maintain poles anywhere they please within unincorporated townships as such permissive right is subject

to the approval of the local authorities. Here, there was no such approval.

Despite Supreme Court precedent setting forth that the utilities authority to use the right-of-way is subordinate to that of the public, CEI and its affiliates continue to ignore such hierarchy. Toledo Edison Co. ("Toledo Edison") is a subsidiary of FirstEnergy Corp and an affiliate of CEI. (Tr. at 358). In *Toledo Edison Co. v. Bd. of Defiance Cty. Commrs.*, 2013-Ohio-5374 (3rd Dist. 2013), the Board of Defiance County Commissioners passed a resolution widening a roadway and requiring Toledo Edison to remove and relocate several utility poles located within the right-of-way, the closest pole being 6 feet, 2 inches from the edge of the pavement and the furthest being 15 feet, 6 inches from the edge of the pavement. *Id.* at ¶¶ 1-2. Toledo Edison refused to relocate the poles, relying on *Turner*. *Id.* at ¶3. A hearing was held, and the Defiance County Engineer indicated that the utility poles were located too close to the edge of the roadway, as widened, and were not in compliance with federal and state guidelines. *Id.* at ¶5. As CEI did herein, it stated that poles would only be relocated at the political subdivision's cost. *Id*. at ¶6. The county commissioners found that the utility poles were obstructions and ordered Toledo Edison to relocate the poles.[7] *Id.* at ¶7. Toledo Edison appealed the resolution to the Defiance County Court of Common Pleas, which determined that the utility poles were not "obstructions," because they would not "incommode or interfere with the usual and ordinary course of travel." The Third District Court of Appeals reversed the trial court's decision under an abuse of discretion standard finding that the trial court erroneously relied upon *Turner*.

In doing so, the court referenced that Toledo Edison's poles were closer to the roadway than both the AASHTO Manual and the ODOT Location and Design Manual standards, as the pole in the *Link* matter was. *Id.* at ¶¶ 12, 44. Moreover, as the Eighth District did in *Bidar* and

[7] Notably, the *Toledo Edison* case involved a county road whereby the county commissioners could deem the utility poles obstructions under R.C. 5547.03.

Link, the Third District recognized that based upon *Turner*, "public utility companies must obtain approval from the public entity that owns the right-of-way prior to erecting poles and other fixtures upon the public right-of-way." *Id.* at ¶29.

Furthermore, *Toledo Edison* found that *Turner* does not support the argument that an object is not an obstruction unless it obstructs the ability of motorists to safely travel the road. *Id.* at ¶35. In this case CEI is attempting to advance the same flawed argument that the pole that Mr. Link struck "did not incommode the use of Savage Road," because it was not within the paved portion of the roadway. A pole can still incommode the roadway if it is in close proximity to the roadway.

Most importantly, the court in *Toledo Edison* stated the following:

> Furthermore, the trial court failed to observe what that Court in *Turner* did observe - that the General Assembly has delegated to public authorities (municipalities, counties, and the State director of transportation) the authority to approve the location of utility poles within the road right-of-way in the interest of public safety. The utility companies in *Turner* were not liable precisely because the State director of transportation had approved the utility pole location, and his approval was "indicative that the object was not an obstacle to the traveling public." The Court in *Turner* recognized that the public authority would consider a variety of factors when considering the location of a utility pole.
>
> The Board of Defiance County Commissioners exercised authority that the General Assembly has affirmatively delegated to it and authority that the Ohio Supreme Court in Turner approved – it reevaluated the location of Toledo Edison's utility poles after a road-widening project with an eye toward public safety.

Id. ¶¶ 45-46, citations omitted.

There were also public policy reasons identified in the *Toledo Edison* decision. First, the location of utility poles should be subject to approval by the applicable public authority since utility companies are given free access to publicly owned road rights-of-ways to maintain their facilities. Second, evaluations for the removal or relocation of poles within the right-of-way are best determined and evaluated by those officials who are not only aware of the particular

circumstances concerning the location, but also bear the responsibility for maintaining the roadways. *Id.* at ¶48.

E. **Revised Code 4931.03 Does Not Grant CEI Carte Blanche Authority to Maintain Utility Poles Alongside Roadways in Unincorporated Townships After Road Reconstruction Projects.**

CEI essentially claims that R.C. 4931.03 read in conjunction with R.C. 4933.14 provide it *carte blanche* authority to place and maintain utility poles anywhere CEI pleases within unincorporated townships.

R.C. 4931.03 states, in pertinent part, the following:

> (A) A telephone company[8] may do either of the following in the unincorporated area of the township:
>
> (1) Construct telecommunications lines or facilities upon and along any of the public roads and highways … by the erection of the necessary fixtures, including posts, piers, or abutments for sustaining the cords or wires of those lines or facilities. The lines and facilities shall be constructed so as not to incommode the public in the use of the roads or highways …
>
> (B)(2) ***Construction under this section is subject to*** section 5571.16 of the Revised Code, as applicable, and ***any other applicable law***, including, but not limited to, any law requiring approval of the legislative authority, the county engineer, or the director of transportation.[9]

In *Bidar*, the court stated that "[t]he very language of the statute in subsection (B)(2) supports our conclusion that a utility's placement of its lines and facilities is not implied as a matter of law. That is, a utility does not have "unfettered discretion in the placement of their poles within the right-of-way." *Id.* at ¶13.

Revised Code 4931.03 provides that utility poles "shall be constructed so as not to incommode the public *in the use of the roads or highways*." R.C. 4931.03 says nothing about the

---

[8] R.C. 4933.14 expressly provides that this section also governs electric, light, and power companies.

[9] The legislative bill analysis for R.C. 4931.03 provides that any construction of telegraph or telephone lines is subject to the Township Permit Law [R.C. 5571.16] as well as any other applicable laws, including, but not limited to, laws requiring approval of the legislative authority, the county engineer, or the Director of the Ohio Department of Transportation.

usual and ordinary course of travel, which is the language used in *Turner*. According to Merriam-Webster's dictionary, the term "incommode" means "to give inconvenience or distress to." The remaining poles on Savage Road are clearly an inconvenience to the public in the use of the roadway, and thus CEI's actions violate R.C. 4931.03(A).

Moreover, Section B(2) of R.C. 4931.03 provides that construction of utility poles is ***subject to the approval*** of the legislative authority and county engineer, echoing the language in *Turner*. As set forth numerous times herein, there was no approval by the Geauga County Engineer or by the local authority, Bainbridge Township, for CEI to maintain the remaining poles along Savage Road.

CEI also violated numerous laws passed by the Geauga County Board of Commissioners related to the Savage Road project. On April 28, 2005, pursuant to R.C. 5547.01, *et seq.*,[10] R.C. 1723.02,[11] R.C. 4513.34[12] and R.C. 5543.16,[13] the Geauga County Board of Commissioners adopted into law the "Geauga County Commissioners Highway Use Manual, Revised 2005."

The Highway Use Manual provides that "[d]esign of the several elements in utility crossings or occupancies ***shall*** conform to the ***requirements*** contained herein, but where State, Local and Industry design standards are higher than the treatments and design requirements specified the higher standards ***shall*** be used. (Tr. at 544). The Highway Use Manual also provides that "[t]he design of the utility facilities ***shall*** conform to guidelines contained herein,

---

[10] R.C. 5547.01, *et seq.*, of the Revised Code imposes upon a Board of County Commissioners the responsibility to control the placement of structures or objects, including utility poles, within the right-of-way of highways.

[11] R.C. 1723.02 authorizes the Board of County Commissioners and the Board of Township Trustees to set forth regulations and restrictions concerning the right to install or maintain poles.

[12] R.C. 4513.34 authorizes the Board of County Commissioners to issue special permits for the operation or movement of vehicles with respect to County highways.

[13] R.C. 5543.16 provides that the County Engineer can set forth rules and regulations for the construction and repair of approaches and driveways.

but where Local and Industry standards are higher than specified herein, Local or Industry standards ***shall*** prevail. (Tr. at 546). Chapter 5515 of the Ohio Revised Code grants ODOT the authority to promulgate standards for the accommodations of utilities. The ODOT *Procedure for Utility Relocations* provides that "[a]ll utility relocation plans covering above-ground facilities ***must*** be reviewed against the clear zone ***requirements*** of the project." (Tr. at 515). The "clear zone" refers to the unobstructed area along a roadway, outside the edge of the traveled way, available for the safe recovery of vehicles that have left the traveled way. Within this area, most motorists should be able to safely regain control of their vehicle. Ideally, there should be no obstructions within the clear zone.

CEI's own engineer, Ralph Delligatti, when commenting on the Savage Road project, admitted that "I think it remains true that existing pole locations do not satisfy the clear zone ***requirement*** with respect to the roadway improvement, and that some of them are as close as two feet-ten inches to the relocated [edge of pavement]." (Tr. at 335). Another engineer of CEI, Arthur Stitt, admitted that CEI's own internal industry standards book provides for the clear zone on Savage Road to be nineteen (19) feet. (Tr. at 236-237, 255, 302). Mr. Stitt further conceded that the ODOT standards provide that the clear zone on Savage Road must be seventeen (17) to twenty-three (23) feet depending on grade. (Tr. at 241, 303). Based upon CEI's own measurements, the pole that Mr. Link struck was only 6 feet, 3.6 inches from the edge of the pavement. (Tr. at 257). Clearly, the subject pole was not even one-half of the distance dictated by industry standards and ODOT.

CEI further acknowledged that it had utility poles in conflict with the Savage Road project and that it was ***required*** to rearrange the poles in CEI's Final 4A Note,[14] which was

[14] According to ODOT, a 4A note is a communication by a utility during a pole relocation project that details all utilities that are located within the construction limits, the disposition of these facilities, the time frame when the work will be completed and any other necessary information. ODOT, *Utilities Primary Roles & Responsibilities*.

prepared by CEI's asset management chief and submitted to the Geauga County Engineer. (Ex. 10). One of the utility poles in conflict was the one that Mr. Link struck.

CEI has attempted to argue that these standards are guidelines and are discretionary; however, the language contained in the Highway Use Manual and ODOT manual is mandatory. In *Dunlap v. W.L. Logan Trucking Co.*, 2005-Ohio-2386 (10th Dist. 2005), ¶16, a case interpreting the ODOT manual, the court stated that "[t]he key to determining what type of decision is discretionary is the manual's use of the word 'should' rather than 'shall.'" The court went on to state that the word 'shall' establishes a mandatory duty, while the word 'should' requires usage of discretion and engineering judgment. *Id.* Joseph Cattell, the current Geauga County Engineer and a former employee of ODOT, testified at trial that the ODOT policies mentioned herein were "mandatory requirements." (Tr. at 514-516).

The Highway Use Manual also states that "[a]ny deviations from the approved plan ***must*** be approved by the Geauga County Engineer prior to installation." (Tr. at 545). After approving CEI's original pole relocation plans, the Geauga County Engineer never approved, and in fact expressly rejected CEI's revised plans for relocation. (Tr. at 546). Consequently, CEI also violated this provision of the Highway Use Manual, which had been adopted into law by the Geauga County Commissioners.

Lastly, CEI violated sections of the Ohio criminal code related to their actions. After the jury verdict in *Link*, the Geauga County Prosecutor's Office commenced a criminal investigation into CEI for felonious assault. Felonious assault is defined as knowingly causing serious physical harm to another. R.C. 2903.11(A)(1). The lesser offense of assault can be defined as recklessly causing serious physical harm to another. R.C. 2903.13(B). CEI's conduct violated both the assault and felonious assault statutes.

Based upon CEI's multiple violations of law, they are not provided any protection under

R.C. 4931.03 since construction of poles under that section is subject to any "applicable law, including, but not limited to, any law requiring approval" by the legislative authority (Bainbridge Township), the county engineer (Geauga County Engineer) and the director of transportation (ODOT). R.C. 4931.03(B)(2).

Lastly, CEI ignores the plain language of R.C. 4931.01, which only provides it the authority to "construct" utility poles along roads in unincorporated townships. Nothing in the statute grants utility companies the authority to determine the placement of such poles, and nothing in the statute grants utility companies the ability to determine whether they may maintain original poles forever in the same place. Such powers are vested within the township and county engineer.

CONCLUSION

If CEI's position is permitted to be advanced the consequences will be grave, both physically and financially, to our citizens and communities, especially in the context of road reconstruction projects. Utilities will no longer be required to relocate poles during road widening projects, and townships will be financially responsible should they want facilities moved. This is in direct contravention with long standing principles of the public's prevailing right to use of the right-of-way, and will no doubt result in fatalities and catastrophic injuries to the users of our roadways and place greater financial burdens upon our townships, counties and other municipalities.

Utilities are granted a permissive right, free of charge, to construct utility poles; however, such right is not absolute. Providing CEI the immunity they seek not only damages the health, safety and welfare of our citizens, but it also places the financial responsibility for relocation of utility poles on tax payers as opposed to on a multi-billion dollar company.

Respectfully submitted,

/s/ *Joseph J. Triscaro*
Joseph J. Triscaro (#0081209)
DEMARCO & TRISCARO, LTD.
30505 Bainbridge Road, Suite 110
Solon, Ohio 44139
T: (440) 248-8811
F: (440) 248-1599
jtriscaro@demarcotriscaro.com

Attorney for Appellees,
Douglas V. Link & Diane Link

CERTIFICATE OF SERVICE

I hereby certify that on this 24th day of November, 2015, a copy of this *Merit Brief* was served via U.S. mail, postage prepaid, to the following persons:

Thomas I. Michals, Esq.
John J. Eklund, Esq.
William E. Coughlin, Esq.
Eric S. Zell, Esq.
CALFEE, HALTER & GRISWOLD LLP
The Calfee Building
1405 East Sixth Street
Cleveland, Ohio 44114
Tel: (216) 622-8200
Fax: (216) 241-0816
tmichals@calfee.com
jeklund@calfee.com
wcoughlin@calfee.com
ezell@calfee.com

Attorneys for Appellants,
The Cleveland Electric Illuminating Company and FirstEnergy Service Company

/s/ *Joseph J. Triscaro*
Joseph J. Triscaro (0081209)
DEMARCO & TRISCARO, LTD.

APPENDIX

Page

Resolution of Convenience & Necessity for the Improvement of Savage Road, TR190, dated May 8, 2006 1

Resolution to Order the Reconstruction of Savage Road (TR190), dated June 23, 2008.....2

Resolution Authorizing the Adoption of the Geauga County Commissioners Highway Use Manual, Revised 2005, dated April 28, 2005 3

Geauga County Commissioners Highway Use Manual.....15

O.R.C. §5543.09 63

O.R.C. §5571.05 64

O.R.C. §5571.01 65

O.R.C. §5571.02 67

Resolution # _____

RESOLUTION OF CONVENIENCE & NECESSITY FOR THE IMPROVEMENT OF SAVAGE ROAD, TR 190
Bainbridge Township, Geauga County, Ohio

WHEREAS, the Bainbridge Township Board of Trustees has determined that the public convenience and welfare requires the improvement of the entire length of Savage Road (TR 190) located between Chagrin Road (CH 9) and Washington Street (CH 606), and to authorize the Geauga County Engineer to prepare engineering plans in accordance with Section 5573.01 of the Ohio Revised Code.

NOW, THEREFORE, BE IT RESOLVED by the Bainbridge Township Board of Trustees that the public convenience and welfare requires the improvement of Savage Road (TR 190) located between Chagrin Road (CH 9) and Washington Street (CH 606) in the Township of Bainbridge, County of Geauga and State of Ohio by grading, paving, draining, widening, constructing and reconstructing the culverts as necessary or otherwise improving the same.

BE IT FURTHER RESOLVED that the Geauga County Engineer is hereby directed to make such surveys, plans, profiles, cross sections, estimates and specifications as are required for the improvement and to transmit copies of the same to this board.

BE IT FURTHER RESOLVED that the costs and expenses of said improvement shall be apportioned as follows:

The right of way costs, if any, shall be paid from local funding sources. The engineering will be provided by the Geauga County Engineer at no cost to the Township. The construction costs for the project shall be paid from a state grant distributed by the Ohio Public Works Commission plus a local match from the local funding sources of Bainbridge Township.

BE IT FURTHER RESOLVED that if preliminary designs show that the project cannot be built within the current right of way, the Township Fiscal Officer is hereby directed, upon the filing of the plans, specifications, estimates, etc., for the improvement by the County Engineer, to cause to be published in a newspaper with a general circulation throughout the county, a notice that a resolution has been adopted providing for said improvement, and that copies of the surveys, plans, profiles, cross sections, estimates and specifications for the improvement are on file in the office of the board for the inspection of persons interested therein. The notice shall further state the time and place for hearing objections to the improvement.

BE IT FURTHER RESOLVED that the Fiscal Officer of the Bainbridge Township Board of Trustees is hereby instructed to transmit a certified copy of this resolution to the Geauga County Engineer.

Voting thereon:	Vote
Christopher Horn	Yes
Jeffrey S. Markley	Yes
Linda W. White	Yes

I, Susan Angelino, Fiscal Officer of the Bainbridge Township Board of Trustees, Geauga County, Ohio certify that the foregoing is a true and correct copy of a resolution adopted at a legally convened Board meeting held on May 8, 2006.

Susan R. Angelino, Fiscal Officer

Resolution No. _____

RESOLUTION TO ORDER THE RECONSTRUCTION OF SAVAGE ROAD (TR190)

Bainbridge Township, Geauga County

WHEREAS, the Board of Township Trustees of Bainbridge Township, Geauga County, has determined by unanimous vote on May 8, 2006 that the public convenience and welfare require the improvement of the entire length of Savage Road (TR 190) located between Chagrin Road (CH 9) and Washington Street (CH 606), and authorized the Geauga County Engineer to prepare engineering plans in accordance with Section 5573.01 of the Ohio Revised Code, and;

WHEREAS, the Geauga County Engineer has completed the plans, profiles, cross sections, estimates, and specifications for the improvement of Savage Road (TR 190) in Bainbridge Township and has filed the specifications with the Board, and;

WHEREAS, the Board of Township Trustees of Bainbridge Township has reviewed the plans, profiles, cross sections, estimates, and specifications and finds them acceptable, and;

WHEREAS, the cost of such improvement will not be excessive in view of the public utility thereof, and;

WHEREAS, the Board of Township Trustees of Bainbridge Township is satisfied that the public convenience and welfare require the proposed improvement of Savage Road (TR 190) in Bainbridge Township.

NOW THEREFORE, BE IT RESOLVED that the Board of Township Trustees of Bainbridge Township in accordance with Section 5573.06 of the Ohio Revised Code hereby orders that such improvement proceed.

BE IT FURTHER RESOLVED that the Board of Township Trustees hereby adopts the surveys, plans, profiles, cross sections, estimates, and specifications for such improvement, the costs of which shall be paid from an Ohio Public Works grant and local funding sources in accordance with Section 5573.07 of the Ohio Revised Code.

BE IT FURTHER RESOLVED that the Fiscal Officer of the Board of Township Trustees of Bainbridge Township is hereby ordered to let this project for bids in accordance with Section 5575.02 of the Revised Code. The bids shall be let upon a unit price basis. Bids shall be received by Sandy Cloninger, Fiscal Officer, until 4:00 P.M. official local time on Monday, July 14, 2008. Bids received will be publicly opened and read aloud at 7:30 P.M. the same day at the Bainbridge Town Hall.

BE IT FURTHER RESOLVED that the Fiscal Officer of the Board of Township Trustees of Bainbridge Township is hereby instructed to transmit a certified copy of this resolution to the Geauga County Engineer.

Voting thereon:	Vote
Matthew J. Lynch	Yes
Linda W. White	Yes
Jeffrey S. Markley	Yes

I, Sandy Cloninger, the Fiscal Officer of the Board of Township Trustees of Bainbridge Township, Geauga County, Ohio certify that the foregoing is a true and correct copy of a resolution adopted at a legally convened Board meeting held on June 23, 2008.

Sandy Cloninger, Fiscal Officer

Commissioners' Journal
April 28, 2005

The Geauga County Board of Commissioners met in session on April 28, 2005 at 10:00 a.m. in the Commissioners' Chambers located at 470 Center Street in Chardon Ohio.

It is declared and determined that all formal actions of the Board of County Commissioners concerning and relating to the adoption of all resolutions that were adopted in this meeting, and that all deliberations of the Board of County Commissioners that resulted in such formal action were open to the public and were in compliance with all legal requirements, including section 121.22 of the Ohio Revised Code.

The President of the Board, Mary E. Samide opened the meeting at 10:02 a.m. by leading the Board and audience in reciting the Pledge of Allegiance.

I, Christine Blair, Commissioners' Clerk of the Board of County Commissioners, hereby attest that this document is a true and exact reproduction of the original minutes on file with the Board of County Commissioners as adopted on 5/17/2005
Christine Blair, Commissioners' Clerk
Board of County Commissioners, Geauga County, OH

APPROVE FINANCIALS

Budget Officer Katarina Katic explained the financials include two supplemental appropriations: one to N3 and one to DARE Medicare. There is one cash transfer to Intensive supervision which is an advance requested by Susan Doudican as her grant money will not be received until May 6th and she needs to cover payroll. Also included is a contract for Data Processing Services for phone and network equipment.

Motion: *by Commissioner Albert, seconded by Commissioner Young to approve and execute resolution 05-079 itemizing the financials for the meeting of April 28, 2005.*

Roll Call Vote:	*Commissioner Albert*	*Aye*
	Commissioner Young	*Aye*
	Commissioner Samide	*Aye*

COMMISSIONERS' OFFICE – NEW PHONE SYSTEM

Motion: *by Commissioner Albert, seconded by Commissioner Young to the purchase of a new phone system in the amount of $310,000.00*

Roll Call Vote:	*Commissioner Albert*	*Aye*
	Commissioner Young	*Aye*
	Commissioner Samide	*Aye*

SHERIFF'S OFFICE – FORD MOTOR CREDIT LEASE

Chief Deputy Scott Hildenbrand informed the Board that prisoner return allowance is the money set aside for out of county transport according to O.R.C. Chief Deputy Hildenbrand also stated the lease application for these vehicles was approved in February of this year.

Motion: *by Commissioner Albert, seconded by Commissioner Young to approve and authorize the President of the Board to execute the lease with Ford Motor Credit for the lease of a 2005 Ford Expedition in the amount of $26,683.87 (premium and interest) for a period of two years. This vehicle will be used for prisoner transport and will be paid from the Prisoner Return Allowance.*

Roll Call Vote:	*Commissioner Albert*	*Aye*
	Commissioner Young	*Aye*
	Commissioner Samide	*Aye*

SHERIFF'S OFFICE – GMAC LEASE

Chief Deputy Hildenbrand stated this lease is a $1.00 buy out or if the Social Security Task Force would cease to exist the vehicles would then be returned. The task force is out of Cleveland and is the best office in the nation as far as conviction rates and stopping payment.

Motion: *by Commissioner Albert, seconded by Commissioner Young to approve and authorize the President of the Board to execute the lease with GMAC for the lease of three 2005 Chevrolet Impala 9C3 in the amount of $53,325.84 (premium and interest) for the period of three years. These vehicles will be used by Deputies assigned to the Social Security Task Force. The Task Force Agreement has the provision for payment of this lease.*

Roll Call Vote:	*Commissioner Albert*	*Aye*

Commissioner Young	*Aye*
Commissioner Samide	*Aye*

DEPARTMENT OF WATER RESOURCES – PARKMAN SEWER PROJECT CHANGE ORDER
DEPARTMENT OF WATER RESOURCES -
Director Gus Saikaly informed the Board this change order is for modifications in the agreement after the original bids were way above the estimates. This project is financed by CDBG portion of the project. This grant has been started in 1999 and the department is under obligation to correct the problem in the center of town in Parkman. If the project is dragged out too long the grants may be at risk, particularly the CDBG grant. Some money has been spent from this grant thus far but it would be wise to spend the grant money before the grant gets too old.

Motion: *by Commissioner Albert, seconded by Commissioner Samide to Board approve and authorize the President of the Board to execute change order #1 increasing the contract with DLZ Ohio, Incorporated for additional engineering and construction management services (per USDA.RD requirements) provided on Parkman Sewer Project in the amount of $364,804.00.*

Roll Call Vote:	*Commissioner Albert*	*Aye*
	Commissioner Young	*Aye*
	Commissioner Samide	*Aye*

DEPARTMENT OF EMERGENCY SERVICES – NOMINATION STATE EMERGENCY RESPONSE COMMITTEE (SERC) FOR APPOINTMENT TO LOCAL EMERGENCY PLANNING COMMITTEE (LEPC)

Motion: *by Commissioner Albert, seconded by Commissioner Young approve and authorize the President of the Board to execute the nomination form for the following individuals to the State Emergency Response Committee (SERC) for appointment to the Geauga County Local Emergency Planning Committee (LEPC):*

Louis K. Marion	*Geauga County Auditor's Office*
Susan Zettl	*United Way of Geauga*
Mary E. Samide	*President, Geauga County Board of Commissioners*

Roll Call Vote:	*Commissioner Albert*	*Aye*
	Commissioner Young	*Aye*
	Commissioner Samide	*Aye*

MENTAL HEALTH AND RECOVERY SERVICES –BOARD OF MENTAL HEALTH AND RECOVERY APPOINTMENTS
Motion: *by Commissioner Albert, seconded by Commissioner Young appoint Joseph Arthur Schellentrager to the Geauga County Board of Mental Health and Recovery Services for a term beginning July 1, 2005 and ending June 30, 2009.*

Roll Call Vote:	*Commissioner Albert*	*Aye*
	Commissioner Young	*Aye*
	Commissioner Samide	*Aye*

Motion: *by Commissioner Albert, seconded by Commissioner Young appoint Mariel Ann Rouru to the Geauga County Board of Mental Health and Recovery Services for a term ending June 30, 2009 to fill the position last held by Susan Scalabrinio.*

Roll Call Vote:	*Commissioner Albert*	*Aye*
	Commissioner Young	*Aye*
	Commissioner Samide	*Aye*

COMMISSIONERS' OFFICE – COMPMANAGEMENT INCORPORATED WORKERS' COMPENSATION CONTRACT
Motion: *by Commissioner Albert, seconded by Commissioner Young to approve and authorize the President of the Board to execute an agreement with*

CompManagement Incorporated for workers' compensation service for the period May 1, 2005 through May 1, 2006 in the amount of $9,750.00.

Roll Call Vote:	*Commissioner Albert*	*Aye*
	Commissioner Young	*Aye*
	Commissioner Samide	*Aye*

MAINTENANCE DEPARTMENT – RESTORATION OF LEADED GLASS WINDOW

Mr. Davis reported to the Board the proposal was more than the original quote as there were some strength problems in the original frame. The company is doing a photo documentation for a history of the repair. The consideration of the window's restoration started when the window was found in a back closet that was originally in the prosecutor's office. This is one of two panels but the other window is suspected to have been shattered. Mr. Davis reported the window is slated to be placed on the second floor where remodeling was done for Juvenile / Probate with lighting to be behind the window to show the colors off. Commissioner Young questioned if the window were to be relocated in the future could it renovated and restored in a fashion that it could be moved to another location without doing harm to the window. Bari Oyler Stith, Ph.D. stated it could be done as it would be framed and reinforced. Commissioner Young thought the possibility of the location the window is slated for would not be seen by much of the public. Ms. Stith said the window was made in 1895 for the third floor. The restoration should take about six months.

Motion: *by Commissioner Albert, seconded by Commissioner Young to accept the proposal from Poremba Stained Glass Studio, Incorporated for the refurbishment and restoration of the leaded glass window located in storage at the Geauga County Archives and Records Center for Option #1 in the amount of $3,115.00.*

Roll Call Vote:	*Commissioner Albert*	*Aye*
	Commissioner Young	*Aye*
	Commissioner Samide	*Aye*

COUNTY ENGINEER'S OFFICE – HIGHWAY USE MANUAL, REVISED 2005 PUBLIC HEARING

Commissioner Samide opened the public hearing at 10:30 a.m.

Motion: *by Commissioner Albert, seconded by Commissioner Young to waive the reading of the public hearing notice.*

Roll Call Vote:	*Commissioner Albert*	*Aye*
	Commissioner Young	*Aye*
	Commissioner Samide	*Aye*

Maintenance Engineer Gary Mohnacsky was present for the public hearing. Mr. Mohnacsky reported this revision is to give the townships more authority on the installation of drive pipes. Each township has different requirements for drive pipes therefore the county is trying to streamline the process by still doing the permits but it is up to the township to oversee how they want the drive pipes installed. The purpose of the revision is to streamline the process of drive permits and make it consistent for all. The drive permits are not required to go through the Engineer's office. The other significant change is to streamline the address process. One or two townships assigned their own addresses. In order to get a drive permit they needed an address and therefore some had to return to the township to get an address and then return for the drive permit which the Engineer's office felt was unnecessary. The consistency in addresses makes it easier for 9-1-1. Commissioner Samide stated that no comments have been received in the mail regarding the public hearing.

Being no comments from the public Commissioner Samide closed the public hearing at 10:40 a.m. Mr. Mohnacsky suggested the Board could wait before approving the resolution to adopt the revision. Mr. Mohnacsky further stated that all the townships have received a copy of the revisions with plenty of notice.

Motion: *by Commissioner Albert, seconded by Commissioner Young to approve and execute Resolution 05-053 authorizing the adoption of the GEAUGA COUNTY COMMISSIONERS HIGHWAY USE MANUAL, REVISED 2005.*

Board of County Commissioners, Geauga County, Ohio

Date: April 28, 2005
Resolution: 05-053

RESOLUTION AUTHORIZING THE ADOPTION OF THE GEAUGA COUNTY COMMISSIONERS HIGHWAY USE MANUAL, REVISED 2005

Geauga County, Ohio

WHEREAS, Chapter 5547 of the Ohio Revised Code imposes upon a Board of County Commissioners the responsibility to control the placement of structures or objects within the bounds of highways, bridges, and culverts, other than on the state highway system; and

WHEREAS, Section 1723.02, so far as the rights of the public therein are concerned, authorizes the Board of County Commissioners as to County roads the power to grant to companies organized for the purposes set forth in Section 1723.01, subject to the regulations and restrictions that the Board prescribes, the right to lay tubing, pipes, conduit, poles, and wires within the County road; and

WHEREAS, Section 4513.34 of the Ohio Revised Code authorizes the Board of County Commissioners with respect to County highways, to issue special permits for the operation or movement of vehicles or combinations of vehicles of a size or weight of vehicle or load, exceeding the maximum specified in Section 5577.01 to 4477.09 of the Ohio Revised Code; and

WHEREAS, the Geauga County Board of Commissioners in an effort to effectively control the use of highways under their jurisdiction, and to expeditiously administer sections of the Code for which they are responsible, has established criteria which, in the Board's opinion if met, would be sufficient, absent a recommendation from the Geauga County Engineer that such not be granted, to authorize the installation of the structure or placement sought under Chapter 5547, or 1723 of the Ohio Revised Code, or the movement requested under Section 4513.34 of the Ohio Revised Code; and

WHEREAS, pursuant to Section 5543.16 of the Ohio Revised Code, the Geauga County Engineer has developed a set of County-wide rules and regulations to govern the construction and repair of approaches and driveways from public roadways within the County; and

WHEREAS, the rules and regulations felt necessary by the Board to authorize the installation of an obstruction or object within the road right-of-way per Chapter 5547 or Chapter 1723, and the basis for a special permit under Section 4513.34, as well as for the construction and repair of approaches and driveways under authority of Chapter 5543.16, have been consolidated into Exhibit A attached hereto and titled, "Geauga County Commissioners Highway Use Manual, Revised 2005."

NOW, THEREFORE, BE IT RESOLVED, by the Geauga County Board of Commissioners that it officially adopt as the rules and regulations of the Board the document attached as Exhibit A and labeled, "Geauga County Commissioners Highway Use Manual, Revised 2005."

BE IT FURTHER RESOLVED that to expedite the processing of permits under Sections I, II, and III, for which the County Commissioners have authority, that the Geauga County Engineer be authorized to issue a permit under Chapter 5547, 1723, or Section 4513.34 of the Ohio Revised Code, if it meets the criteria which the Commissioners have by this resolution adopted to cover the particular authorization request.

BE IT FURTHER RESOLVED that if, in the opinion of the Geauga County Engineer, the criteria established in the "Highway Use Manual" are insufficient to safeguard the interests of the County in any particular instance, that in such case, he refuse to issue a permit, and that the applicant be advised that such request shall be submitted to the Board of County Commissioners for the consideration of the Board as to the necessity for special safeguards, or outright denial if the danger cannot, in the Board's opinion, be satisfactorily guarded against.

BE IT FURTHER RESOLVED that this manual shall be come effective as of April 28, 2005.

Feb. 3. 2012 10:53AM Geauga County Commissioners No. 7052 P. 6/14

Commissioners' Journal
April 28, 2005

BE IT FURTHER RESOLVED that the Clerk of the Geauga County Board of Commissioners is hereby instructed to transmit a certified copy of this resolution to the Geauga County Engineer.

Roll Call Vote:	*Commissioner Albert*	*Aye*
	Commissioner Young	*Aye*
	Commissioner Samide	*Aye*

COUNTY ENGINEER'S OFFICE – IMPROVEMENT OF ADAMS ROAD AND THE PAVED PORTION OF SWINE CREEK ROAD - MIDDLEFIELD

Motion: *by Commissioner Albert, seconded by Commissioner Young to approve and execute Resolution 05-078 to Cooperate with Middlefield Township Board of Trustees for the Improvement of Adams Road and the paved portion of Swine Creek Road.*

Board of County Commissioners, Geauga County, Ohio

Date: *April 28, 2005*
Resolution: *05-078*

RESOLUTION OF THE GEAUGA COUNTY BOARD OF COMMISSIONERS PROPOSING TO COOPERATE WITH THE MIDDLEFIELD TOWNSHIP BOARD OF TRUSTEES
2005 Improvement of Adams Road and a Portion of Swine Creek Road

Commissioner Albert moved the adoption of the following resolution, which was duly seconded by Commissioner Young:

WHEREAS, the public interest demands the improvement hereinafter described; and

WHEREAS, Adams Road and Swine Creek Road were county roads until the modification of the Geauga County Highway system was approved in 2004; and

WHEREAS, the Geauga County Engineer has expressed a desire to aid in the funding of a project to improve the paved portions of Adams Road (TR 512) and Swine Creek Road (TR 119) in 2005; and

WHEREAS, Section 5535.08 of the Ohio Revised Code allows counties to assist in funding the maintenance and repair of township roads; and

WHEREAS, the public interest for this improvement is best served with the cooperation of the Geauga County Board of Commissioners and the Middlefield Township Board of Trustees.

NOW THEREFORE, BE IT RESOLVED, by the Board of County Commissioners of Geauga County, Ohio, that:

SECTION I –The public interest demands the improvement of Adams Road and a portion of Swine Creek Road, situated in the Township of Middlefield, County of Geauga and State of Ohio.

SECTION II – The Geauga County Engineer is authorized to reimburse Middlefield Township for costs related to work performed and accepted during a project to maintain and repair Adams Road and a portion of Swine Creek Road in 2005.

SECTION III – The funds for the reimbursement shall come from funds available to the County Engineer to improve roads and bridges.

BE IT FURTHER RESOLVED, that the Clerk of the Geauga County Commissioners is hereby instructed to transmit three original copies of this resolution to the Middlefield Township Board of Trustees Commissioners for acceptance.

Roll Call Vote:	*Commissioner Albert*	*Aye*

Commissioner Young	*Aye*
Commissioner Samide	*Aye*

DEPARTMENT OF WATER RESOURCES – NEWBURY TOWNSHIP 208 PLAN AND MEMORANDUM OF UNDERSTANDING

Director Gus Saikaly reported this process has been going on for about a year and a half as the township had indicated it wanted to expand the existing 208 plan to encourage economic development to generate taxes that would be helpful to the community. Planning Director Dave Dietrich and Township Trustee Glen Quigley were present for the discussion. Mr. Dietrich stated this is a joint effort with major property owners, township officials and the Chagrin River Watershed Partners. This group met frequently last year and came up with the boundaries that do not include any residential areas. The town center (the corner of Auburn Road and Route 87) has a proposed plan presented by Panzica and their engineer Chip Hess to redevelop the area. Mr. Quigley commented that with a project like this a treatment plant is needed. Discussions have been ongoing with the Newbury School about utilizing the unused portion of their treatment facility and tie this project into that facility as well as the Mangia Mangia Restaurant which is currently having sewer issues. The Newbury School is officially in the 208 Plan. Mr. Saikaly noted the 208 Plan can be amended anytime. Mr. Dietrich added that when developers look at an area they want to know what infrastructure may be planned particularly for commercial and light industrial. If it is not in the plans they will just move on and find another area.

Motion: *by Commissioner Albert, seconded by Commissioner Young to approve and execute the 208 Service Area Plan and attending Memorandum of Understanding for and with Newbury Township for portions of the township delineated on the attached map as requested by the Newbury Township Trustees.*

Roll Call Vote:	*Commissioner Albert*	*Aye*
	Commissioner Young	*Aye*
	Commissioner Samide	*Aye*

DEPARTMENT OF WATER RESOURCES – COUNTY 208 PLAN

According to Mr. Saikaly, this consolidates all the little changes that have occurred over the past few years with the help of the Planning Commissioner staff. After approval this will be passed on to NOACA.

Motion: *by Commissioner Albert, seconded by Commissioner Young approve the updated countywide 208 Plan map.*

Roll Call Vote:	*Commissioner Albert*	*Aye*
	Commissioner Young	*Aye*
	Commissioner Samide	*Aye*

COMMISSIONERS' OFFICE – SAFETY CENTER PROJECT – CHANGE ORDER #005-003

Project Manager Robert Pace gave a power point presentation on the state of the County Safety Center Project and the change order request which is for a cable tray. The cable tray is not in the floors as dispatch center was added later therefore the cables will go in the ceiling.

Motion: *by Commissioner Albert, seconded by Commissioner Young to approve and execute change order #3 (005-003) increasing the contract with Lake County Electric Incorporated for the Geauga County Safety Center Project - Electric Trades package to install a cable tray between room FA 49 to room FM 05 necessitated by the addition of dispatch function, in the amount of $28,924.00.*

Roll Call Vote:	*Commissioner Albert*	*Aye*
	Commissioner Young	*Aye*
	Commissioner Samide	*Aye*

COMMISSIONERS' OFFICE – BICENTENNIAL COMMITTEE

Those present for the work session include: Bari Oyler Stith, President; Anne Prusha, Vice President; Anita Stocker, Treasurer; and David Beten, Secretary. Ms. Stith gave a power point presentation on the Bicentennial celebration. Conversations started out of the O.R.C. 347.01 and 347.02 which states the Commissioners may appoint a board for a bicentennial celebration and they may appropriate funds for this type of celebration. The board of managers was

appointed in 2001 which then created a mission statement. All funds flow through the typical purchase order system that goes through the Auditors Office and the Commissioners. Some accomplishments include new historical markers at the Great Geauga County Fair and Thompson Ledges, Ohio Bicentennial Bell casting ceremonies as well as the traveling bell trailer. The Bicentennial Board has been doing several fund raisers but the Board is looking for seed money for several items, such as offering framed matted signed print to large donors and for a major fund raiser which is the Commissioners Bicentennial Ball. Seed money is also needed for Arcadia Publishing who will produce an illustrated Geauga County history book which will retail for about $20.00. It will not cost much to produce the book which makes for a bigger profit margin. The Bicentennial Ball will be limited to 350 people.

The Bicentennial Board is looking for a Chairperson and sponsors for several planned events. One of the events will be for 40 students to take on a public officials' position to allow them to "rule for the day". Other events include a presentation by persons who portray historic characters with shows and work shops with the theme "War and Peace". The Board is working on getting the Cleveland Orchestra to perform, and a Heritage Trail drive yourself tour with maps and brochures and perhaps a CD.

Plans are in place to secure invitations. Commissioner Young commented a plan should be in place as there will a tremendous demand for tickets and so they are fairly distributed. The Bicentennial Committee will need to come up with a balanced plan. Mr. Beten suggested they needed input from the Commissioners on teiring of the tickets for a fair distribution.

Motion: *by Commissioner Albert, seconded by Commissioner Young to allocate $20,000.00 as seed money to the Bicentennial Committee.*

Roll Call Vote:	*Commissioner Albert*	*Aye*
	Commissioner Young	*Aye*
	Commissioner Samide	*Aye*

Commissioner Samide recommended a professional letter of authority to solicit for donations be drawn up.

RECESS

Motion: *by Commissioner Albert, seconded by Commissioner Young to take a brief recess before beginning the Economic Development work session.*

Roll Call Vote:	*Commissioner Albert*	*Aye*
	Commissioner Young	*Aye*
	Commissioner Samide	*Aye*

The Board reconvened at 12:40 p.m.

ECONOMIC DEVELOPMENT WORK SESSION

Those in attendance include: Alan Wilson, Parkman Trustee; Gus Saikaly, Director Water Resources; Dave Beten, Geauga Tourism; Nancy Zangerle, resident; Kevin O'Reilly, Lucinda Sharp Gates, Parkman Township; Rob Ray, Burton Township; Anita Stocker, Director Community and Economic Development; Dave Dietrich, Director Planning Commission; Glen Miller, Maple Leaf.

Commissioner Albert opened the work session by explaining the purpose of these meetings is to see what can be done to develop the county. The Board is aware of the problems in Parkman, and there is land available in Middlefield and the Board would like to know what interest there is in developing the county and perhaps to brainstorm for ideas.

Parkman is looking for ways to entice commercial and industrial traffic to stop in Parkman and spend money there. Mandated zoning requirements were discussed due to all the restrictions. Commissioners cannot resolve zoning issues and land use plans they must deal with their trustees. The Board has always been willing to work with the townships trustees, in fact, this county is basically township driven. The 208 Plan helps townships develop a vision and to work together with the Board of Commissioners. It was a general consensus that this Board is willing

to listen to the townships and do what is necessary to improve the economic potential. The comment was made if this meeting is symbolic of support for the townships, than all that is needed is vision. In the past the county hired consultants to prepare sewer and water plans without taking into account zoning and local land use which turned out to be a tremendous failure. Consequently with the 208 process it turns out to be an opportunity to work together. The developers do not want to be caught in a crossfire between the township and the Commissioners' Office. It may be time to revisit land use and the 208 plans along with a vision from the individual townships.

Mr. Rob Roy suggested to all to "look outside the box" and to look at a problem as an opportunity and what tools are available to deal with this opportunity. In Burton, for example they are losing acreage and need farmland preservation but need to balance that with industry for a tax base. Mr. Dietrich pointed out not overlooking agri-business as well.

Commissioner Samide informed all that a survey was done when she was a Trustee in Munson Township. The survey was very positive with the people of the township communicating what they actually wanted. It was requested to preserve certain areas of the township which was accomplished. Commissioner Samide also stated that we have to protect what we have today. The ultimate goal is to preserve and protect the land and do it in an intelligent way and to keep growing.

Mr. Saikaly posed the question to the audience – what are the components to bring in businesses. Commissioner Young offered several reasons why developers don't come to Geauga County such as a low unemployment rate, undependable electric service, not much infrastructure.

Ms. Stocker commented that a lot of big businesses that are here were small when they started and grew while being in Geauga County. In trying to bring businesses the issues of electricity and lack of infrastructure make a difference to them.

Mr. Dietrich remarked that Middlefield Village has substantial activity with commerce, infrastructure and some abatement available which is a down side for Parkman as they are not that far away. Developers look for areas that have open arms and welcome them. Mr. Dietrich also suggested the communities create a town identity by creating a town center.

Change usually comes out of a crisis. Look at the opinions of the people who control zoning and make changes- the registered voters can change zoning laws. The next step is to build a plan / vision in each township and then market the idea.

Mr. Beten suggested contacting bigger corporate companies and find out who their suppliers are and bring them closer which would bring the corporate companies supply costs down and economic development to the area. Mr. Beten added the new Dean at Kent State University should be an integral part of this economic development group as he believes he is a forward thinking Dean.

Mr. Roy stated we need to concentrate on retention of talented students to keep them in the State of Ohio. The resources are here we need to develop them and use them. It was suggested the talent is leaving the area as there is no housing available. Mr. Roy suggested if you want traffic to stop and spend money in your township then you must build something for them to stop for. It was also suggested that the youth are leaving for cosmopolitan areas for the fun and excitement.

Mr. O'Reilly stated people move to Geauga County to get away from the malls and congestion. Commissioner Samide stated in Munson with the survey that was done the people stated undeniably that did no want it to be developed any more than it is.

Commissioner Samide stated the affordable housing that is built in Geauga County ends up being unaffordable within a year. Mr. Beten stated for every dollar raised on residential housing the cost of services for those residences is $38.00, however for commercial / industrial base costs are about $.37. Mr. Saikaly commented this is the reason for having these meetings – the existing tax structure, based on the residential concept, is not supporting this community.

The group summarized the major need for balance between residential and industry. Again, the group believed the need to return to the tax payers and get their input on what they want for their county / townships / villages. There is a need to commercialize ideas of entrepreneurs and

not just have them sell their ideas. Commissioner Albert inquired if there wasn't some sort of start up money for such instances to which Ms. Stocker replied it is available. Mr. Dietrich suggested the county start their own revolving loan funding and run the program customized to the needs of the county.

The group will meet again next month on the last Thursday.

The Board reconvened after a brief recess to celebrate Commissioner Albert's birthday at 2:19 p.m.

COMMISSIONERS' OFFICE – RESOLUTION HONORING DAVID P. JOYCE

Motion: *by Commissioner Albert, seconded by Commissioner Young approve and execute Resolution 05-080 honoring David P. Joyce on the occasion of being selected for Ohio Women's Bar Association 2005 Family Friendly Award.*

Board of County Commissioners, Geauga County, Ohio

Date: *April 28, 2005*
Resolution: *05-080*

A RESOLUTION HONORING DAVID P. JOYCE
ON THE OCCASION OF BEING SELECTED FOR
OHIO WOMEN'S BAR ASSOCIATION 2005 FAMILY FRIENDLY AWARD

WHEREAS; the Ohio Women's Bar Association is the first state bar association that brings together women and men lawyers interested in issues that uniquely affect women and fosters communications and networking among women attorneys and promoting and advancing professional opportunities for women attorneys; and

WHEREAS; the Ohio Women's Bar Association promotes and provides continuing legal education targeting areas of particular interest to women attorneys, and monitors and supports government legislation policies and practices affecting women; and

WHEREAS; the Ohio Women's Bar Association serves as a statewide resource representing perspectives of women in the legal profession, is at the forefront of a profession-wide effort to promote meaningful alternative work arrangement in both private and public practice; and

WHEREAS; the Ohio Women's Bar Association established the Family Friendly Award honoring those legal employers in Ohio who best exemplify the commitment to work-life balance arrangements, and assures that lawyers can take care of their families and still pursue a successful career; and

WHEREAS; the Geauga County Board of County Commissioner's recognizes and are of the same mind with David P. Joyce in setting up the special allowances for the work-life balance with his employees; and

NOW, THEREFORE BE IT RESOLVED, the Geauga County Board of County Commissioner's salutes and congratulates David P. Joyce for his leadership, dedication and his many contributions to the County of Geauga as well as the honor of being selected for OWBA's Third Annual 2005 Family Friendly Award.

BE IT FURTHER RESOLVED, this resolution shall become a permanent record of the Board of County Commissioners, Geauga County, Ohio.

Roll Call Vote:	*Commissioner Albert*	*Aye*
	Commissioner Young	*Aye*
	Commissioner Samide	*Aye*

MAINTENANCE DEPARTMENT – 470 CENTER STREET PARKING LOT IMPROVEMENTS

Director George Davis reported this contract did no require a risk insurance policy as Shelly and Sands is not storing any materials on the property. It was approved by the Prosecutor's

Office. Commissioner Young suggested Mr. Davis put the contractor on the fast track to get this project done as soon as possible.

Motion: *by Commissioner Albert, seconded by Commissioner Young to approve and execute a contract with Shelly and Sands Incorporated for the 470 Center Street Parking Lot Improvement in the amount of $106,940.25.*

Roll Call Vote:	*Commissioner Albert*	*Aye*
	Commissioner Young	*Aye*
	Commissioner Samide	*Aye*

MAINTENANCE DEPARTMENT- WORK SESSION WITH TREMCO INCORPORATED – ROOF REPLACEMENT FOR BUILDINGS AT 470 CENTER STREET

Mr. Davis introduced Mr. John Stehli, of Tremco Incorporated, who reviewed his report on the roof repair at 470 Center Street. The current roof may have been up to standards in 1985 but is no longer effective. Mr. Stehli informed the Board there are gas lines and electrical work that needs to be done before a contractor would begin the roof repair, such as electrical conduit laying on the roof and running over the edge and around the corners. There is ponding water, algae growth on the roof, nail lifting which should have been screwed in, shrinkage, wind damage and all the previous patchworks are obvious. The Board suggested an opinion should be initiated to discover if the land is more valuable without the existing buildings. Mr. Stehli stated the asbestos containing roofing material isn't that big of a health issue as it was ten years ago as it is embedded in 500 degree asphalt and allowed to cool so it is a zero health risk. However, a hazardous waste manifest is still needed and the material must go to a proper landfill. The roofs on Building # 4, # 7 and the conference room of building # 8 have no life left in them and any money spent on these roofs is a waste as it will end up being torn off and disposed. The Board suggested they are looking to sell the offices in five to ten years. Mr. Stehli suggested a thirty year roof would not be warranted in this case.

Mr. Stehli recommended if the county is expecting to build a roof and didn't want to replace it in their tenure he would put an upper class roof not a top of the line. He further added a base, 3 ply built up roof with slope, no ponding of water, proper flashings and all details done correctly there should be an expectation of lasting thirty years or more out of a roof. Mr. Davis stated these buildings were meant to last a short time and then to be sold. Mr. Stehli stated the money being spent now on these roofs will be for leak repair or replacement with the exception of lower level building #8 which would be spent in keeping it dry for some time. Mr. Stehli's report included several options on roof repair from a thirty year roof to replacing all the roofs but if the intention is to be out of the buildings he would suggest the lower end of the roof repair which should last up to twelve years.

Mr. Davis added the electric work and moving the gas lines on the roofs that must be done before the roof repair could start could be done by his department. Mr. Davis stated no decision needs to be made today. Commissioner Young added that if the Board is planning on moving he felt the Board should leave the property in good shape, which would make it more saleable. Mr. Stehli suggested if the Board went out for public bid he suggested the specs be reviewed to make sure the performance standard of quality is as requested.

If Tremco does the specs he will make sure there are at least five competitive bidders, he would not bid he would just recruit bidders according to his specs. Mr. Stehli stated he does not charge Geauga County for writing specs as he lives in Geauga County. The draft specs should be ready within two weeks for discussion. Commissioner Samide stated if the roofs are not taken care of now it will keep returning to haunt the County.

Motion: *by Commissioner Albert, seconded by Commissioner Young to approve John Stehli, C.S.I., C.D.T. of Tremco Incorporated to draft the specifications for the roof repair of the County Offices at 470 Center Street.*

Roll Call Vote:	*Commissioner Albert*	*Aye*
	Commissioner Young	*Aye*
	Commissioner Samide	*Aye*

Commissioners' Journal
April 28, 2005

MEETINGS

Fri., 4/29	*Commissioner Samide and Dave Lair will attend the County E-Check Working Committee meeting at 1:30 p.m.*
Tue., 5/3	*The Commissioners will hold their regular session at 10:00 a.m.*
Tue., 5/5	*The Commissioners will hold their regular session at 10:00 a.m.*

BEING NO FURTHER BUSINESS TO COME BEFORE THE BOARD, COMMISSIONER SAMIDE ADJOURNED THE MEETING AT 3:45 P.M.

Geauga County Board of Commissioners

Craig S. Albert

William S. Young

Mary E. Samide

Claudine Kozenko, Commissioners' Clerk

GEAUGA COUNTY COMMISSIONERS

HIGHWAY USE MANUAL

ADOPTED: September 14, 1999

REVISED: April 28, 2005

SECTION I

POLICIES AND PROCEDURES FOR THE ACCOMMODATION OF UTILITIES WITHIN THE RIGHTS-OF-WAY OF COUNTY HIGHWAYS.

SECTION II

POLICIES AND PROCEDURES FOR THE ISSUANCE OF SPECIAL HAULING PERMITS ON COUNTY HIGHWAYS.

SECTION III

POLICIES AND PROCEDURES FOR THE INSTALLATION OF DRIVE PIPES WITHIN THE RIGHTS-OF-WAY OF COUNTY AND TOWNSHIP HIGHWAYS

GEAUGA COUNTY COMMISSIONERS
HIGHWAY USE MANUAL

SECTION I

POLICIES AND PROCEDURES FOR THE
ACCOMMODATION OF UTILITIES ON
COUNTY HIGHWAYS

TABLE OF CONTENTS

PART PAGE

A. *INTRODUCTION* 1

B. *SCOPE AND APPLICATION* 1

C. *DEFINITIONS* 2-5

D. *GENERAL GUIDELINES*

1. LOCATION 5-6
2. DESIGN 6-7

E. *PIPELINES*

1. GENERAL 7
2. LOCATION 7
3. DESIGN 8
4. INSTALLATION 9

F. *POWER AND COMMUNICATION LINES*

1. GENERAL 9
2. LONGITUDINAL OCCUPANCY 10
3. OVERHEAD CROSSINGS 10
4. UNDERGROUND CROSSINGS 10-11

G. *UTILITY INSTALLATIONS ON OR NEAR HIGHWAY BRIDGES*

1. GENERAL 11
2. CONDITIONS 11-12
3. AERIAL CROSSING NEAR HIGHWAY BRIDGES 12
4. UNDERGROUND CROSSING NEAR HIGHWAY BRIDGES 12
5. DISCLAIMER 12

H. *PERMITS*

1. GENERAL 13
2. RESPONSIBILITY FOR PERMITS 13
3. GENERAL PROVISIONS APPLICABLE TO ALL PERMITS 13-14
4. WHEN PERMITS ARE REQUIRED 14
5. EXCEPTION TO NORMAL PERMIT REQUIREMENTS 15

I. *PERMIT PROCEDURES*

1. GENERAL 15
2. APPLICATION FOR PERMIT 16
3. APPLICATION REVIEW AND SITE INSPECTION 16
4. BOND, INSURANCE AND HOLD HARMLESS REQUIREMENTS.. 16-17
5. ISSUANCE OF PERMITS 17-18

J. *FEES*

GENERAL 18

K. *INSPECTION*

GENERAL 18

L. *SITE RESTORATION*

1. GENERAL 19
2. EXCAVATION WITHIN THE RIGHT-OF-WAY 19
3. OPEN CUT 20
4. BACKFILL MATERIAL 20
5. TIME PERIOD FOR COMPLETION OF RESTORATION 20-21

APPENDICES

1. SURETY BOND 22
2. HOLD HARMLESS FORM 23
3. HIGHWAY USE PERMIT APPLICATION 24-25
4. HIGHWAY USE PERMIT 26-27

SECTION II

POLICIES AND PROCEDURES FOR THE ISSUANCE OF SPECIAL HAULING PERMITS ON COUNTY MAINTAINED HIGHWAYS

TABLE OF CONTENTS

PART PAGE

A. *PERMIT PROCEDURES*

1. GENERAL 28
2. APPLICATION FOR PERMIT 28
3. APPLICATION REVIEW 28
4. BONDS AND INSURANCE 29
5. ISSUANCE OF PERMITS 29
6. TYPES OF SPECIAL HAULING PERMITS 30
7. APPLICANT'S RESPONSIBILITIES 30

B. *FEES*

1. GENERAL 30-31

APPENDICES

1. CONTRACTUAL ENDORSEMENT 32
2. PERMIT BOND 33-34
3. SPECIAL HAULING PERMIT APPLICATION 35
4. LIMITATION/PROVISIONS-SPECIAL HAULING PERMIT 36-37

SECTION III

POLICIES AND PROCEDURES FOR THE INSTALLATION OF DRIVE PIPES WITHIN THE RIGHT-OF-WAY OF COUNTY AND MOST TOWNSHIP HIGHWAYS

TABLE OF CONTENTS

PART PAGE

A. *DRIVEWAY PERMITS*

1. GENERAL 38
2. PERMIT FEES 38
3. LOCATION 38
4. INSTALLATION OF DRIVEPIPE 38
5. ADDRESSES 39
6. OTHER PERMITS 39

APPENDICES

1. DRIVEWAY PIPE INSTALLATION GUIDELINES 40
2. GEAUGA COUNTY MAILBOX INSTALLATION POLICY 41-42

SECTION I

POLICIES AND PROCEDURES FOR THE ACCOMMODATION OF UTILITIES WITHIN THE RIGHTS-OF-WAY OF COUNTY HIGHWAYS

A. INTRODUCTION

The Geauga County Board of Commissioners has responsibility for maintaining the public highways under its jurisdiction per Chapters 5547 and 1723 of the Ohio Revised Code as necessary to preserve the integrity, operating safety and function of the highway facility. Since the manner in which utilities cross or otherwise occupy highway rights-of-way can materially affect appearance, safe operation and maintenance of the highway, it is necessary that such use and occupancy be reasonably regulated.

The purpose of this policy is to set forth the conditions under which utility facilities may utilize the rights-of-way of public highways under the jurisdiction of the Board of Geauga County Commissioners. It is the intent of this policy to permit maximum use of rights-of-way under the Board's authority consistent with preservation of the highway investment, safety of the highway user, highway maintenance requirements, proposed future highway improvements and environmental considerations. This policy provides guidelines to permit uniform practices throughout the County for the accommodation of utilities and recognizes the need for special consideration for unusual or hardship situations.

Design of the several elements in utility crossings or occupancies shall conform to the requirements contained herein, but where State, Local or Industry design standards are higher than the treatments and design requirements specified herein, the higher standards shall be used.

This policy may be modified as conditions dictate for operation of the highway.

B. SCOPE AND APPLICATION

This policy applies to all utilities, as defined on page 5 to be constructed, adjusted or relocated within rights-of-way under the jurisdiction of the Geauga County Commissioners after the effective date of this policy.

This policy does not supersede specific permits or agreements previously issued or entered into by the Board of Geauga County Commissioners for the occupancy of highway rights-of-way by specific facilities, nor does it supersede specific requirements of other governmental agencies or bodies.

The provisions of this policy are based on the American Association of State Highway and Transportation Officials publication, "A Guide for Accommodating Utilities on Highway Rights of Way".

C. DEFINITIONS

Augering – The procedure of making a hole below the surface by the use of an earth auger.

Average Daily Traffic – The average 24-hour volume, being the total volume during a stated period divided by the number of days in that period; unless otherwise stated, the period is a year. The term is commonly abbreviated as ADT.

Backfill – Replacement of an excavated material with an acceptable soil, controlled density fill (CDF) or granular material in an excavation.

Bedding – Organization of soil or other material to support an underground facility.

Boring – The procedure of making a hole below the surface by the use of boring bar, rotating cutting head or pipe jack.

CDF – Controlled Density Fill – A mixture usually consisting of cement, fly ash, sand, water and admixtures used to enhance flowability. CDF is generally used for utility trench, retaining wall, culvert, bridge abutment and stormsewer backfill of annular space in pipe relining, filling of voids around structures, filling abandoned tanks, pipe bedding and paving subbase. [Example LSM-50 or LSM-100. (see definitions)].

Cap – An external cover for openings in pipes or conduits.

Carrier – Pipe directly enclosing a transmitted liquid, gas or solid.

Casing – A larger diameter pipe or structure enclosing a carrier.

Catch Basin – A structure to collect surface drainage and direct it through underground pipe lines.

Concrete – A reinforced or non-reinforced mixture of Portland cement, No. 57 or No. 67 Limestone coarse aggregates, fine aggregate (sand) and water in a quantity not to exceed maximum water-cement ratio of 0.5.

> Class "C" Concrete – A mix of cement (6 ½ sack), sand and limestone aggregate in proportions specified under Item 451 in the State of Ohio Department of Transportation's Construction and Materials Specification Manual.
>
> High Early Concrete – A term given to a fast-setting Portland cement concrete used for accelerated setting and strength development. – A type of concrete designed to be opened to traffic in 24 hours. Achieved by using a Class "C" mix with an accelerator and mid-range water reducer admixture, or increased cement content.

Clear Roadside Policy – The policy employed by the County to increase safety, improve traffic operation and enhance the appearance of highways by designing, constructing and maintaining highway rights-of-way as wide, flat and rounded as practical and as free as practical from physical obstructions above the ground such as trees, drainage structures, massive sign supports, utility poles and other ground-mounted obstructions.

Coating – Material applied to or wrapped around a pipe.

Conduit or Duct – An enclosed tubular runway for protecting the wires or cables.

Cover – (bury) – Depth to top of facility below grade of roadway, ditch or other surface.

Cradle – Rigid structural element under and supporting a pipe.

Direct Burial – Installing a utility facility underground without encasement, by plowing or trenching.

Driving – The procedure of placing pipe below the surface by applying force in intermittent blows to a block or driving shoe, attached to the trailing end of the pipe. A driving head or plugged collar is attached to the leading end of the conduit or pipe. An air hammer generally provides the driving force, also known as pipe jacking.

Encasement – Poured concrete, completely surrounding a pipe line or conduit installed in a trench.

Encroachment – Unauthorized use of highway rights-of-way or easements as for signs, fences, buildings or other structures.

Flexible Pipe – A plastic, fiberglass or metallic pipe having large ratio of diameter to wall thickness which can be deformed without undue stress.

Gallery – A prefabricated or monolithic structure large enough to permit inspections, repair and replacement of one or more utility lines in place.

Grate – A covering over the inlet to a catch basin, tee riser, manhole, or end of storm sewer that allows water to enter the system but keeps certain amounts of debris out.

Highway, Street or Road – A general term denoting a public way for purposes of vehicular travel, including the entire area within the right-of-way.

Inlet – An opening in an underground drainage system, culvert or bridge that allows water to enter the system.

Jacking – The procedure of installing pipe below the surface by the application of force to the trailing end of the capped conduit or pipe through hydraulic or mechanical jacks or pushing machines.

LSM – A Low Strength Mortar backfill which is proportioned in numerous ways for different applications such as CDF or LSM-100 which has 100 lbs. of cement, 250 lbs. of fly ash, 2850 lbs. of sand and 500 lbs. of water while the LSM-50 is made up of 50 lbs. of cement, 250 lbs. fly ash, 2910 lbs. of sand and 500 lbs. of water. These standard mixes may be altered for a diversity of applications.

Manhole – An opening in an underground system which workmen or others may enter for the purpose of making installations, inspections, repairs, connections and tests.

Normal – Crossing at a right angle.

Oblique – Crossing at an acute angle.

ODOT – Ohio Department of Transportation.

Permit – An agreement, by which the highway authority regulates and/or gives approval of the use and occupancy of highway rights-of-way by utility facilities or private lines. (A non-standard permit is one in which the application contains a feature in variance with applicable policies contained in this section or minimum standards for design.)

Pipe Line – A continuous carrier used primarily for the transportation of liquids, gases and/or solids from one point to another using either gravity or pressure flow.

Plates – Flat sheets of steel with a minimum ¾ inch thickness and a minimum of six (6) feet width, used by contractors to cover open pits or road cuts allowing vehicle use and/or protection for the traveling public during utility installations.

Pressure – Relative internal pressure in psig (pounds per square inch gauge).

Right-of-way – A general term denoting land, property or interest therein usually in a strip, acquired for or devoted to transportation purposes.

Rigid Pipe – Pipe designed for diametric deflection of less than 1.0%.

Roadside – A general term denoting the area of the right-of-way adjoining the outer edge of the pavement.

Roadway – The portion of a highway, including shoulders, for vehicular use.

Semi-Rigid Pipe – Pipe designed to tolerate diametric deflection up to 3.0%.

Service Drops or Lines – All lines supplying utility service to individual consumers from a main line.

Shoulder (berm) – The portion of the roadway contiguous with the traveled way for accommodation of stopped vehicles, for emergency use, and for lateral support of base and surface courses.

Slab, Floating – Slab not supported by a rigid foundation.

Sleeve – Short casing through a pier or an abutment of highway structure.

Specified Minimum Yield Strength (SMYS) – The force per unit area which will produce a stress sufficient to cause permanent change in shape is known as the yield point, and this stress is the limiting factor in pipe line design.

T-Riser – A tee connection installed in an underground drainage system with an open end extended to the surface of the ground to allow surface water to enter the system.

Traveled Way – The portion of the roadway for the movement of vehicles exclusive of shoulders and auxiliary lanes.

Trench – A narrow open excavation in which a utility may be installed.

Tunnel – An enclosed excavation through which a utility is to be installed.

Unprotected – An underground utility line installed without provision of casing, encasement or gallery.

Untrenched – Installed without breaking ground or pavement surface, such as by jacking, boring or tunneling.

Utility – "Utility" shall mean and include all privately, publicly or cooperatively-owned lines, facilities and systems for producing, transmitting or distributing communications, power, electricity, light, heat, gas, oil, crude products, water, steam, waste, stormwater not connected with highway drainage and other similar commodities, including publicly-owned fire and police signal systems and street lighting systems, which directly or indirectly serve the public or any part thereof. The term "utility" shall also mean the utility company, inclusive of any wholly-owned or controlled subsidiary. Privately-owned service lines devoted exclusively to supplying the various commodities to the owner and which do not directly or indirectly service the public, shall be considered a "utility".

Vent – Appurtenance to discharge vapors from casings.

D. GENERAL GUIDELINES

The following are general guidelines for the location and design of all utility installations within the highway rights-of-way:

1. LOCATION

a. Utility lines should be located to minimize the need for later adjustments to accommodate future highway improvements and to permit servicing such lines with minimum interference to highway traffic.

b. Longitudinal installations should be located on uniform alignment as near as practicable to the right-of-way line so as to provide a safe environment for traffic operation and preserve space for future highway improvements and/or other utility installations.

c. To the extent feasible and practical, utility line crossing of the highway should be perpendicular to the highway alignment.

d. The horizontal and vertical location of utility lines within the highway road right-of-way limits should conform with the clear roadside policies applicable for the system, type of highway and specific conditions for the particular highway section involved. The location of above ground utility facilities should be consistent with the clearances applicable to all roadside obstacles for the type of highway involved.

e. Where other locations are not feasible, bridges may be utilized to support utility facilities as provided in Part G of this section.

f. At no time will utility lines be allowed to utilize existing drainage culverts or drive pipes as a means of encasement.

g. In all cases, full consideration should be given to measures, which reflect sound engineering principles and economic factors necessary to preserve and protect the integrity and visual quality of the highway and the utility facilities, their maintenance efficiency, and all safety factors.

h. Any deviations from the approved plan must be approved by the Geauga County Engineer prior to installation. Any changes to the original plan approved by the Geauga County Engineer shall require the utility to submit as-built drawings or an addendum to the plans in place of the original plans.

2. DESIGN

a. The utility is responsible for the design of the facility to be installed within the highway rights-of-way or attached to a highway structure. The Geauga County Engineer is responsible for review of the utility's proposal with respect to the location of the facilities to be installed and the manner of installation and, acting under the authority of the Geauga County Commissioners, may accept or reject the utility's proposal as submitted. This includes the measures to be taken to preserve the safe and free flow of traffic, structural integrity of the roadway or highway structure, ease of highway maintenance, appearance of the highway and the integrity of the utility facility.

b. Utility installation on, over, or under the highway rights-of-way and utility attachments to highway structures shall, at a minimum, meet the following requirements, and any and all subsequent amendments thereto:

(1) Electric power and communication facilities shall conform to the currently applicable Codes of the Public Utilities Commission of Ohio, and/or the provisions of the National Electrical Safety Code, as prescribed therein.

(2) Sanitary Sewer and Water lines shall conform to the currently applicable specifications of the Geauga County Department of Water Resources.

(3) Storm or drain lines shall comply with the currently applicable specifications provided in the Geauga County Stormwater Management and Sediment Control Rules and Regulations.

(4) Pressure pipelines shall conform to the currently applicable sections of ANSI Standard Code for Pressure Piping of the American National Standards Institute and/or applicable Federal, State and Industry Codes.

c. The design of ground-mounted utility facilities should offer desirable characteristics to the appearance of the highway and its environment. When necessary, above ground utility installations shall be clearly identified with a minimum four (4') foot flexible delineator and protected.

d. All permanent utility installations on, over, or under highway rights-of-way and attachments to highway structures should be of durable materials designed for long service life expectancy and relatively free from routine servicing and maintenance.

e. On new installations or adjustments of existing utility lines, provisions should be made for known or planned expansion of the utility facilities; particularly those located underground or attached to bridges. New installations should be planned so as to minimize hazards and interference with highway traffic when additional overhead or underground lines will be installed at some future date.

E. PIPELINES

1. GENERAL

The design of underground utility pipe crossings or occupancies of highways must necessarily be varied because of site conditions, type of utility involved, type of highway and degree of access control; therefore, the following is to be considered as a flexible policy which may be modified where special conditions exist. The design of the utility facilities shall conform to the requirements contained herein, but where Local or Industry design standards are higher than specified herein, Local or Industry standards shall prevail. Arrangements for emergency maintenance procedures shall be made whenever possible by the utility notifying the Geauga County Engineer and the Geauga County Sheriff for the purpose of traffic safety.

2. LOCATION

Within highways, crossings are permitted subject to the conditions set forth in this policy. Longitudinal lines may be permitted and such installations should be located between the flow line of the ditch and right-of-way line as near as possible to the right-of-way line.

3. DESIGN

a. Casing is required for non-plastic pipelines crossing the highway and carrying liquid petroleum or gas under pressure.

Casing is required for plastic pipe crossing the highway and carrying liquid petroleum or gas under pressure if the internal pressure exceeds 100 psig.

Geauga County, through the Geauga County Engineer, reserves the right to require casing or equivalent alternate protection based on conditions or hazards involved.

When not required by Geauga County, casing may be used at the election of the utility when it is the policy of the utility to use casing.

b. Galleries may be provided for the purpose of performing repair or replacement of a pipe or lines of extreme importance to public convenience or safety, or to a dependent industrial installation, where the cost of consequences of a prolonged shutdown would be intolerable. Galleries shall be designed so that most repairs and replacement of sections of pipeline or lines can be made without resorting to the replacement of the entire pipeline. The gallery design shall include one or more entrance shafts of a size suitable for removal of one pipe section from the gallery. Shafts shall be sealed with a removable cap. Each cap shall have a manhole opening suitable for inspection access.

c. Casings and galleries may be constructed of any material permitted by the Ohio Department of Transportation Construction and Material Specifications for use in roadway culverts, and shall be designed to meet all conditions found at the specific site.

d. Tunnels shall be constructed of steel liner plates left in place, or of materials acceptable to the Geauga County Engineer. Voids remaining outside of the tunnel lining shall be filled with the appropriate type of concrete recommended by the Geauga County Engineer. Tunnel ends shall be sealed and provision may be made for tunnel drainage if an outlet is available.

e. Pipelines shall be designed to accept internal and external pressure and to resist corrosion.

Pipelines of any type carrying gas or liquid under pressure shall be equipped with valves which when closed will isolate a section of line including the portion within the highway right-of-way.

Gravity flow pipelines, such as sanitary sewers, shall be of a type suitable for roadway culverts. Joints shall be compression type or an approved equivalent.

f. Requirements for strengthening or replacing an existing utility pipeline which is to remain in its original position beneath a new highway facility shall be based on the design, strength and condition of the existing utility pipeline and upon the type of surrounding soil and the foundation soils. If a fill or surcharge is to be placed upon the existing ground above and existing utility pipeline, thorough investigation should be made and consideration given to such treatments as casing, concrete cap, partial encasement, full encasement or replacement with a stronger pipe.

4. INSTALLATION

a. In general, pipeline crossings of all highways shall be made without disturbing existing pavements. Open cut of pavement will be permitted only when no other reasonable alternative method is available and only when approved by the Geauga County Engineer.

Where a pipe crossing or casing is installed, augering or boring ahead of the casing will be allowed, where soil conditions permit. Water jetting will not be permitted. Installation by pneumatic mole is permitted when the outside diameter of pipe is 2" or less.

Galleries, water vaults, casings or unprotected utilities installed in open cut trenches or highway rights-of-way shall be bedded and backfilled in accordance with the standards herein.

b. The grade of the crown of an unprotected pipe or of the crown of a casing shall be established such that minimum depth of cover will be four (4') feet under any surface for waterlines and three (3') feet under any surface or two (2') feet under open ditches for all other utility lines.

In accordance with Federal Minimum Pipeline Safety Standards, gas or other liquid petroleum transmission lines may require greater cover in areas not under pavement.

Additional depth of cover may be required to meet existing field conditions.

c. When the highway is currently, or will be constructed, on an embankment or in a shallow cut, casings or galleries, when used shall extend across the full width of the right-of-way. If approved by Geauga County Engineer, the casing or gallery may be terminated beyond the outer edge of the ditch flow line or the embankment slopes if a ditch is not provided.

d. When the highway is currently, or will be constructed in a deep cut, casings or galleries when used, shall extend across the roadway to include the effective width of the outside shoulders. Effective width is considered to be the offset distance between the edge of the pavement and the face of the guardrail as provided elsewhere on the highway project. Overhead structures, either utility or highway, may be considered for the purpose of spanning deep cuts with water and gas lines when approved by the Geauga County Engineer.

F. POWER AND COMMUNICATION LINES

1. GENERAL

a. The guidelines for accommodation of power and communication lines on highway rights-of-way will vary with the site conditions, type of line involved, type of highway and degree of access control; therefore, the following is to be considered a flexible policy which may be modified where special conditions exist. The design of the utility facilities shall conform to guidelines contained herein, but where Local and Industry standards are higher than specified herein, Local or Industry standards shall prevail.

b. The vertical clearance of overhead lines crossing highway rights-of-way shall not be less than the minimum required by the Public Utilities Commission of Ohio and/or the National Electrical Safety Code. The Geauga County Engineer will determine the location and extent of additional clearance required during highway construction and will make every effort to give ample notification to the utility.

c. Arrangements for emergency maintenance procedures shall be made whenever possible by the utility notifying the Geauga County Engineer and the Geauga County Sheriff for the purpose of traffic safety.

2. LONGITUDINAL OCCUPANCY

a. Within highway rights-of-way, longitudinal lines may be permitted. Location of such lines should be between the ditch and the right-of-way line as near as possible to the right-of-way line.

Ground-mounted utility facilities should be placed as far as practical from the traveled portion of the roadway beyond the clear roadside area, and be of a pleasing design compatible with the visual quality of the highway involved. Guy wires to ground anchors and stub poles shall not be placed between a pole and the traveled portion of the roadway where they encroach upon the clear roadside area. There is no established dimension for the width of a clear roadside area, but when there is sufficient space (i.e., the space between the edge of the pavement or curb line and the right-of-way line), 30 feet from pavement edge should be used as a design safety concept guide.

b. Longitudinal installations of overhead lines should be limited to single pole construction. Joint-use single pole construction is encouraged at locations where more than one utility or type of facility is involved.

3. OVERHEAD CROSSINGS

Structures for the support of overhead utility lines crossing highway rights-of-way may be permitted; however, such structures should be located between the ditch and the right-of-way line in a manner that will cause the least interference with the normal maintenance of the highway.

4. UNDERGROUND CROSSINGS

a. Lines crossing under highways shall be of durable materials designed to meet conditions found at the site, and installed so as to virtually preclude any necessity for disturbing the roadway to perform maintenance or expansion operations.

b. Conduits, casings or unprotected utilities installed in open cut trenches if permitted, across highway rights-of-way, shall be bedded and backfilled in accordance with the provisions set forth in Part L. of this section.

c. Conduits, casings or unprotected utilities for underground lines crossing existing highways shall be installed by boring, tunneling or augering without disturbing the pavement or paved shoulders, if soil conditions are suitable. Water jetting will not be permitted. Installation by pneumatic mole is permitted when the outside diameter of the pipe is 2" or less. Open cut of pavements will not be permitted unless it is demonstrated that there is no reasonable alternate method available and approval has been obtained from the Geauga County Engineer.

d. Conduits or casings shall extend beyond the outer edge of the ditch flow lines, or the embankment slope, if a ditch is not provided. When the highway is constructed in a deep cut the conduit or casing may be terminated beyond the shoulders, if approved by the Geauga County Engineer.

e. The grade of the crown of conduit, casing or unprotected power or communication line shall be established such that minimum depth of cover will be three (3') feet under any surface or two (2') feet under any open ditch line, whichever is greater.

Additional depth of cover may be required to meet existing field conditions.

G. UTILITY INSTALLATIONS ON OR NEAR HIGHWAY BRIDGES

1. GENERAL

In many cases, attachment of utility facilities to highway bridges is a practical arrangement and will be permitted, where found to be in the best interest of the public. However, attaching utility facilities to a highway bridge can materially affect the bridge, the safe operation of traffic, the efficiency of maintenance and the appearance. Therefore, where it is feasible and reasonable to locate utility facilities elsewhere, attachment to bridge structures should be avoided.

2. CONDITIONS

Where, in the opinion of the Geauga County Engineer, other locations for a utility facility to span an obstruction prove to be difficult or too costly, consideration shall be given for attaching the utility facility to a bridge structure under the following conditions:

(a) The utility installation shall be made in a manner that will not inhibit maintenance of the structure, reduce the vertical clearance of the structure, or detract from the appearance of the structure.

(b) None of the structural members in the bridge are to be reduced in section, or the cross-section of the super-structure revised to other than a normal section solely for the purpose of accommodating utility lines.

(c) Utility attachments to the outside of a bridge structure will not be permitted except where reasonable alternatives do not exist.

(d) Gas mains may be supported by bridges provided the internal pressure does not cause stress in the pipe to exceed 30% SMYS (specified minimum yield strength) of the pipe, and cut-off valves are provided at readily accessible locations within a reasonable distance from each end of the bridge.

(e) Water mains may be supported by bridges if cut-off valves are provided at readily accessible locations within a reasonable distance from each end of the bridge, and insulating wrapping is provided, to prevent sweating or freezing.

f) The design of pipeline installations on bridge structures shall provide for a pipeline support that will prevent vibration in the pipeline.

(g) Power and communication conduits installed on bridges shall be installed with access points located within reasonable distance from each end of the bridge.

(h) Any proposed utility attachment to a bridge structure shall be applied for prior to its construction. Application shall consist of submitting plans and drawings to the Geauga County Engineer for review detailing the utility attachment.

3. AERIAL CROSSING NEAR HIGHWAY BRIDGES

(a) Aerial crossings above highway bridges will not be permitted.

(b) Aerial crossings near highway bridges shall not be less than 125 feet from the bridge abutment closest to the crossing.

(c) Aerial lines near highway bridges that are parallel to traffic shall be no more than one (1') foot from the right-of-way line.

4. UNDERGROUND CROSSING NEAR HIGHWAY BRIDGES

(a) Underground crossings near highway bridges shall not be less than 75 feet from the bridge abutment closest to the crossing.

(b) Underground crossings near highway bridges that are parallel to traffic shall be no more than 2 feet from the right-of-way line subject to conditions at the site.

(c) Underground utilities crossing channels shall be a minimum of (4') feet below channel flowline.

(d) Four (4') foot depth shall be maintained a distance of 50% of the bridge span from each abutment or twenty-five (25') feet from each abutment, whichever is greater.

5. DISCLAIMER

Approval of permit by the Geauga County Engineer does not release any utility owner from the obligation to relocate the utility in the future if deemed necessary by the Geauga County Engineer.

H. PERMITS

1. GENERAL

Utilities, contractors, homeowners, etc. shall obtain permits for the use or occupancy of all highway rights-of-way under jurisdiction of Geauga County.

2. RESPONSIBILITY FOR PERMITS

The Geauga County Engineer shall be responsible for receiving applications for permits; reviewing the application and plan; issuing permits; inspecting construction to insure conformity to the permit; and maintaining records of all applications and permits. The Contractor is responsible for conforming to the conditions of this document and all applicable Local, State and Federal regulations.

3. GENERAL PROVISIONS APPLICABLE TO ALL PERMITS

During the progress of the work all traffic control devices shall be installed and maintained as required for the protection of the traveling public in accordance with the "Ohio Manual of Uniform Traffic Control Devices for Streets and Highways." The same shall be properly lighted at night, when required. The party or parties to whom the permit is issued shall be responsible for all damages to persons or property due to or resulting from any work done under this permit.

Except as authorized under the permit, no excavation shall be made or obstacles placed within the limits of the right-of-way.

If, in the opinion of the Geauga County Engineer, any grading or other work done under the permit interferes with the drainage system of the highway in any way, catch basins, ditches, or outlets shall be constructed as necessary. The applicant is advised that the Geauga County Soil and Water Conservation District may require further action regarding any drainage issues.

If the party or parties to whom a permit is issued does anything contrary to the terms of the permit, and after written notice, fails to correct such work or to remove such structure or materials as ordered by the Geauga Board of County Commissioners, Geauga County may correct such work or remove such structure or material; and the party or parties to whom the permit is issued shall reimburse Geauga County for any expense incurred in correcting the work or removing the structure or materials to the limit of the law.

All the work contemplated under the permit shall be done under the inspection and to the satisfaction of the Geauga County Engineer.

Upon completion of the work under the permit, the highway shall be left clean of all debris, excess materials, temporary structures and equipment; and all parts of the highway shall be left in condition acceptable to the Geauga County Engineer.

The granting of a permit does not in any way abridge the right of Geauga County in its jurisdiction over highways. If, in the process of any future work for the benefit of the traveling public, it becomes necessary, in the opinion of the Geauga County Commissioners, to order the removal, reconstruction, relocation or repair of any of the fixtures, or work performed under the permit, said removal, reconstruction, relocation or repair shall be wholly at the expense of the owners thereof, and be made as directed by the Geauga County Commissioners.

During the time any work is being performed, an inspector shall represent the interests of Geauga County. The inspector will determine from the nature and complexity of the job whether their continual presence is needed.

Geauga County will require a performance guarantee, a Hold Harmless Statement, Liability Insurance with the Geauga County Board of Commissioners named as "additional insured" and a copy of the contractor's current workers' compensation certificate as a prerequisite to the issuance of a permit.

All of the above conditions shall be applicable to the work authorized under the permit, unless the same are inconsistent with conditions entered on the face of the permit, in which case the conditions written or printed on the face of the permit shall apply.

The acceptance of a permit or the doing of any work thereunder shall constitute an agreement, between Geauga County and the party or parties to whom the permit is granted, to comply with all of the conditions and restrictions printed or written in said permit.

A permit may be revoked at any time by Geauga County for noncompliance with any of the conditions, restrictions and regulations.

When highway improvement contracts are awarded by the Geauga County Commissioners at or near the area covered by the permit, the party or parties to whom the permit is issued shall cooperate with the highway contractors and each arrange all work so as not to interfere with the operations of others. The permit holder shall schedule their work in an acceptable manner and shall perform it in proper sequence to that of the others so that the services of the parties will not be unnecessarily interrupted.

4. WHEN PERMITS ARE REQUIRED

a. Underground Installations

Utilities shall be required to obtain permits from Geauga County for the installation of all pipelines, conduits or other underground structures, either temporary or permanent, crossing or occupying highway rights-of-way. Each structure must be installed in accordance with the provisions of the permit.

5. EXCEPTION TO NORMAL PERMIT REQUIREMENTS

a. A permit is not required for maintenance of utility facilities. Maintenance as used in this instance does not include any upgrading of service, or work involving the disturbance of any ground. The utility shall be responsible for installing and maintaining traffic control devices, as required for the protection of the traveling public, in accordance with the "Ohio Manual of Traffic Control for Construction and Maintenance Operations" for all work performed on highway rights-of-way.

b. Should the proposed utility installation fail to meet the requirements as set forth in this manual, or should the Geauga County Engineer be of the opinion that a permit should not be issued because the installation would jeopardize the structural integrity of the roadway or highway structure or endanger the traveling public, then the applicant may request granting of special permission to proceed from the Geauga County Commissioners by a separate resolution.

c. Permits are not required, but the Geauga County Engineer must be notified, when service connections are performed. The utility shall submit to the Geauga County Engineer a weekly manifest of service connections performed in Geauga County.

I. PERMIT PROCEDURES

1. GENERAL

a. The procedures set forth herein shall serve as a guide in establishing a uniform method for the application or regulations governing the issuance of permits for the use or occupancy of all highway rights-of-way under the jurisdiction of the Geauga County Commissioners.

b. <u>These procedures do not cover permits for the movement of overweight and/or oversize vehicles and loads on Geauga County highways</u> (see Section II of the "Geauga County Commissioner's Highway Use Manual").

c. Issuance of permits in accordance with this section shall apply to all bridges under the jurisdiction of Geauga County and only to Geauga County highways outside municipal corporations unless Geauga County has, by agreement, assumed full maintenance of a section of a highway that lies wholly or in part within a municipal corporation.

d. Requests to locate utility facilities on Geauga County highways must be made in accordance with the policies and procedures as set forth in this section. Applicants are advised that townships within Geauga County may have permit requirements for township-maintained roads. The Geauga County Commissioners assume no responsibility for the failure of the applicant to secure such applicable township permits. Each utility has the responsibility for contacting the Ohio Utilities Protection Services for their work.

2. APPLICATION FOR PERMIT

a. Application for permit forms and instructions are available at the office of the Geauga County Engineer, 470 Center Street, Bldg. 5, Chardon, OH 44024-1068.

b. Completed applications containing all required information and fees, as outlined on the application form shall be returned to the Geauga County Engineer for processing.

c. Applications shall bear the signature of the property owner, lessee, company or corporate official or contractor responsible for construction and maintenance of the installation placed within highway right-of-way.

d. At least two copies of a detailed plan shall accompany each application that is submitted. The plan shall show the proposed location of the installation with reference to the pavement edge and right-of-way line and shall show the owners' property lines. If the installation crosses the highway, a cross section of the present roadway and proposed installation shall be shown. In addition, the following information shall be shown on the plan: the township in which the installation is to be made; Geauga County highway name and number; and, the distance from some geographical point, such as intersecting highways, city or village corporation limits, section lines, or State, County or township highways and any existing utilities within the right-of-way

3. APPLICATION REVIEW AND SITE INSPECTION

a. After receiving the completed application, the Geauga County Engineer will review the permit application and any other information related to the possible installation. Once an office review has been completed, the representative will inspect the site of the proposed installation. The applicant shall be responsible for marking in the field the existing right-of-way and the location of the proposed installation.

b. Review time will be governed by the complexity of the proposed installation. Generally, seven to ten (7-10) working days shall be allowed for processing any application. The applicant shall be responsible for marking in the field the existing right-of-way and the location of the proposed installation.

c. If, after reviewing the application and inspecting the site, the Geauga County Engineer determines that the proposed location or type of construction of the utility will materially affect the appearance, operation or maintenance of the highway, a conference will be scheduled with the utility to discuss possible revisions to the location or type of construction.

4. BOND, INSURANCE AND HOLD HARMLESS REQUIREMENTS

Prior to issuance of a permit, the utility will be required to furnish the following:

a. Performance Guarantee

A Surety Bond, substantially as set forth in Appendix 1or a certified check for the amount established by the Geauga County Engineer to cover the cost of all possible damages and maintenance of the disturbed area sustained by Geauga County on account of the failure of the utility to perform all or part of the work as specified in the permit. Said bond or certified check shall remain in force for normal permits for a period of ninety (90) days following completion of the work performed or if weather conditions are not beneficial to restoration, then when deemed appropriate by the Geauga County Engineer. If the restoration has not been completed in accordance with Section I, Part I. SITE RESTORATION, said bond or certified check shall be forfeited and will become property of the Geauga County Commissioners.

A corporate bond from a public utility, when approved by the Geauga County Commissioners may be furnished in lieu of a performance bond or certified check.

b. Hold Harmless Statement

A signed statement in substantially the following form:

_____ as consideration for the authorization from Geauga County to place its _____within the road right-of-way of No. _____, hereby agrees to hold harmless, indemnify, and defend Geauga County, its Commissioners, officers, employees, and agents against any and all claims, losses, damages or lawsuits for damages, to include reimbursement of any fees or costs incurred by Geauga County arising from, allegedly arising from, or related to, the installation for which authorization is sought in Permit No. _____.

c. Liability Insurance

The applicant shall provide a Certificate of Liability Insurance with no less than a thirty (30) day termination clause naming the Geauga County Commissioners as additionally insured with limits of not less than $1,000,000 bodily injury liability, $1,000,000 each occurrence, and $500,000 property damage liability. If the applicant does not have specified insurance limits, but has an excess umbrella liability policy of $1,000,000 or greater, the excess liability policy shall be considered as acceptable insurance coverage. The insurance provided shall be of a comprehensive nature, covering any and all damages which may arise during the installation of the project, including underground property damage. Evidence of insurance must be provided to the Geauga County Commissioners.

5. ISSUANCE OF PERMITS

a. After all necessary bonds or certified checks have been posted, and after both the utility and the Geauga County Engineer have agreed on the location and schedule of construction, the Geauga County Engineer, acting as the representative of the Geauga County Commissioners, will issue the permit.

b. The Geauga County Engineer, acting under the authority of the Geauga County Commissioners, may issue a permit, reject the application or request a revised application be submitted.

c. Issued permits will be on the form approved by the Geauga County Commissioners and signed by the Geauga County Engineer or his/her representative.

d. Issued permits must be in the possession of employees in charge of the work at all times and must be shown upon request to any employee of the Geauga County Engineer, the Geauga County Commissioners, or the Geauga County Sheriff.

e. Permits will become void if work has not commenced within thirty (30) days of issuance unless conditions warrant an approval of an extension of time.

J. FEES

1. GENERAL

a. Fees, payable to the Geauga County Engineer, will be charged for the cost of issuing a permit.

(1) Permit Fee

The permit fee covers the cost of clerical work and pre-construction site inspection.

An application for permit will not be reviewed until the permit fee has been paid.

K. INSPECTION

1. GENERAL

a. Prior to any excavation for a utility, or any construction, installation, adjustment or relocation of a utility, as defined on page 5, within rights-of-way under the jurisdiction of the Geauga County Commissioners, the Geauga County Engineer shall be notified. The utility owner will be required to advise the Geauga County Engineer at least one (1) full working day in advance of any proposed activity. An inspector will determine from the nature and complexity of the job whether their continual presence is needed.

b. Failure to comply with the above policy may result in denial to begin construction until proper notification has been received. If scheduled work must be canceled, the Geauga County Engineer must be notified at least one (1) hour prior to the requested inspection time.

c. Repeated failure to notify the Geauga County Engineer when work is being performed may result in the withholding of the approval of future permit applications.

L. SITE RESTORATION

1. GENERAL

In all cases where a permit is granted for excavating or placing obstacles within the limits of a Geauga County highway, it shall be the responsibility of the permit holder to restore the disturbed area to a condition equal to or better than it was originally.

All mailboxes, signs, yards, driveways, roads, drainage structures, fences, ditches and sidewalks damaged or removed during construction shall be replaced or repaired in a timely manner, by the permit holder, to a condition equal to or better than it was originally.

After any pipes, conduits, drains or other underground structures are laid or any excavation is made within the limits of the highway, the trenches or openings shall be properly backfilled with suitable material as directed by the Geauga County Engineer.

2. EXCAVATION WITHIN THE RIGHT-OF-WAY

a. All excavation for mainlines within the right-of-way requires a permit.

b. Approved excavations made within the traveled portion of the highway, in the berm within six (6') feet of the pavement edge, and within six (6') feet or less of the inside edge of the trench, in street intersections, or in driveways, shall be backfilled with approved granular materials as directed by the Geauga County Engineer.

Excavations shall be backfilled with Item 304, Aggregate Base, in layers not to exceed six (6") inches, loose measurement. Each layer shall be compacted to the satisfaction of the Geauga County Inspector. LSM-100 fill may also be used with the approval of the Geauga County Engineer.

c. Approved excavations which require removal of the pavement, shall be cut with a masonry saw, or Vermeer type wheel to a depth required to provide a clean break. The width of the pavement cut shall be a minimum of four (4) feet. The width of a trench shall be a minimum one (1) pipe diameter plus twelve (12") inches each side of the pipe. The contractor must maintain at least one-way traffic at all times during construction by using steel plates to bridge the trench. The trench shall be backfilled with Controlled Density Fill or LSM-100 or as otherwise directed by the Geauga County Engineer.

Excavations that require CDF fill material may be filled by "Free Dumping" the CDF. The CDF must be of a consistency that will cause it to flow into all voids created by the excavation, and shall be brought up to the top of subgrade. Steel plates must then be set in place and edges sealed with bituminous asphalt material "cold patch" material for a period of twenty-four (24) hours. The road base and surface must be replaced as required and approved by the Geauga County Engineer.

3. OPEN CUT

When normal excavation is deemed impossible or the best method of installing the utility is by open cut, it must first be approved by the Geauga County Engineer. The Geauga County Engineer will determine the necessity and if approved, will list any and all special requirements to be made during the work.

Approved excavations made within the traveled portion of the highway or within four (4') feet of the pavement edge or paved berm, shall be backfilled with LSM-100 materials as directed by the Geauga County Engineer.

Where work performed requires removal of the pavement, the surface shall be cut with a masonry saw or Vermeer type wheel to a depth of six (6") or as required to provide a clean break. The width of the trench shall be a minimum one (1) pipe diameter plus twelve (12") inches each side of pipe.

The contractor must maintain at least one-way traffic at all times during construction by using steel plates to cover the trench and providing proper traffic control.

4. BACKFILL MATERIAL

Excavations shall be backfilled with Item 304, Aggregate Base, in layers not to exceed six (6") inches, loose measurement. Each layer shall be tamped or rolled. If layers cannot be tamped or rolled, an LSM (see definition) should be used, or the area should be backfilled as directed by the Geauga County Engineer. In addition, where the road surface was removed for construction, the surface shall be replaced with either asphalt concrete (Item 404) or high-early-strength concrete as directed by the Geauga County Engineer. The surface thickness shall be a minimum of two (2") inches of (404) over six (6") inches of (301) (eight inches (8") total) and shall be finished to the same grade as the existing road surface. Adequate precautions shall be taken to prevent the concrete from freezing. Any concrete that fails within ninety (90) days after project completion shall be replaced by permit holder, or on his failure to act, by utilization of his performance guarantee. When using Portland cement concrete, the contractor shall protect the restored area by using steel plates set in place and edges sealed with a bituminous asphalt material "cold patch" for a period of twenty-four hours or until such time as normal traffic can proceed without causing damage to the roadway surface. Driveways and drainage ditches that have been disturbed shall have a top layer of material comparable to that which was removed.

5. TIME PERIOD FOR COMPLETION OF RESTORATION

a. All right-of-way restoration must be completed within ninety (90) days of completion of the work performed within the right-of-way. If conditions prohibit restoration to be performed within the ninety (90) day time period, an extension may be granted at the discretion of the Geauga County Engineer.

b. If restoration is not completed within the approved time-period, the required work will be performed by the Geauga County Highway Department or in the event of the unavailability of the Geauga County Highway Department, an outside hired contractor. All costs incurred for labor and materials to perform the restoration shall be billed to the permit holder for payment.

c. Failure to pay all amounts charged for restoration performed by the Geauga County Highway Department or outside contractor will result in the amount being deducted from the performance guarantee furnished or forfeiture of the performance guarantee.

d. Any violation of the restoration requirements may result in the withholding of approval of future permit applications.

e. In the case of a contractor damaging another utilities' already existing installation, the contractor is responsible for contacting that utility immediately. The contractor should, under no circumstances, make any attempt to repair the damage prior to notification and approval of that utility. The utility hiring such contractor and/or said contractor shall be solely liable to the utility whose existing installation has been damaged for any such damage, and shall hold Geauga County harmless for any claims or judgments asserted or entered against it, to include its fees and costs, for any such damage.

APPENDIX I

COUNTY OF GEAUGA
SURETY BOND

KNOW ALL MEN BY THESE PRESENTS: That we,_____ as Principal, and _____, as Surety, are held and firmly bound unto the County of Geauga, State of Ohio, in the sum of_____ for the payment of which well and truly to be made, we jointly and severally bind ourselves, our successors, heirs, executors, administrators, and assigns.

WITNESS our hands and seals this _____ day of _____, _____.

THE CONDITION OF THE ABOVE OBLIGATION IS SUCH, that whereas, the above-named Principal may receive authorization from Geauga County to install, repair and replace tubing, pipes, conduits, and wires, together with the necessary appurtenances on a regular basis within the rights-of-way of Geauga County highways per individual permits granted for such work, which shall be made a part of this bond the same as though set forth herein:

NOW, if said _____shall well and faithfully do and perform the things authorized by individual permits issued by Geauga County and perform according to the terms of the permit and the policies and procedures adopted by the Board of Geauga County Commissioners and save and keep harmless and indemnify Geauga County, its commissioners, officers, employees, and agents from all actions, suits, costs, damages and expenses, including attorney's fees, which shall or may at any time happen to come to it on account of any injury or damage received or sustained by any person as a result of the activity authorized by each permit issued by Geauga County, then this obligation shall be void; otherwise, the same shall remain in full force and effect; it being expressly understood and agreed that the liability of the surety for any and all claims hereunder shall in no event exceed the penal amount of this obligation as herein stated.

The said Surety hereby stipulates and agrees that no modifications, omissions, or additions, in or to the terms of the said permit or in or to the plans or specifications therefore shall in any way affect the obligation of said surety on its bond.

_____ Witness

_____ Principal (seal)

_____ Title

_____ Witness

_____ Surety (seal)

_____ Attorney-in-Fact

APPENDIX 2

HOLD HARMLESS STATEMENT

Date _____

Office of the Geauga County Engineer
470 Center Street, Bldg. 5
Chardon, OH 44024-1068

_____ as consideration for the authorization from Geauga County to place, install, repair or replace structures, objects, tubing, pipes, conduits and/or wires together with the necessary appurtenances from time to time within the right-of-way of Geauga County highways per individual permits granted for such work, hereby agrees to hold harmless, indemnify and defend Geauga County, its commissioners, officers, employees and agents against any and all claims, losses, damages or lawsuits for damages, to include reimbursement of any fees or costs incurred by Geauga County, arising from, allegedly arising from, or related to, the installation for which authorization has been received through individual permits.

Signed: _____

Title: _____

Company: _____

_____

Phone: _____

Fax: _____

APPENIX 3

C.H. NO. _____ ROAD NAME_____

TOWNSHIP_____

GEAUGA COUNTY, OHIO
HIGHWAY USE
PERMIT APPLICATION

See Instruction on Back of Sheet

TO: Geauga County Board of Commissioners
c/o Office of The Geauga County Engineer
470 Center Street, Bldg. 5
Chardon, Oh 44024-1068

DATE _____

Application is hereby made by (1) _____
P.O. Address (2) _____
to (3) _____
_____
_____
_____

at the following described location (4) in _____, Township across/along C.H. NO._____

Mi._____ Ft. _____ (N E W S) of _____
in accordance with the attached plan (5).
Work will commence on or about _____ and will require
_____ days.

(7) Open cut of pavements shall not be permitted unless no reasonable alternate method is available.
If the proposed installation requires the opening of the pavement give the following information.
A. Conditions necessitating opening of pavement _____
_____

B. The opening to be made in the pavement will be _____ feet long by _____ feet wide and _____ feet deep.
C. Pavement is to be replaced by:
(a) _____ as directed by
and to the complete satisfaction of the Geauga County Engineer.
(b) We hereby agree to backfill the trench of said opening in compliance with the standards of the Geauga County Engineer as set forth herein using construction methods, and materials, and workmanship so prescribed in Part L. (Site Restoration), Section 1 of the Geauga County Commissioner's Highway Use Manual.

(8) All work requiring men or vehicles on the pavement or shoulders shall comply with all the requirements of the Ohio Manual of Uniform Traffic Control Devices. Failure to comply with these requirements will be cause for immediate suspension of the permit until the proper traffic controls have been provided.

(9) We agree to comply with all the conditions, restrictions and regulations of the Geauga County Commissioner's Highway Use Manual.

Contractor or Subcontractor: _____

_____ By _____

_____ Title _____

_____ Phone No. _____

TO BE FILLED IN BY THE OFFICE OF THE GEAUGA COUNTY ENGINEER:
C.H. NO. _____ ROAD NAME _____ TOWNSHIP _____
WIDTH OF R/W _____ FEET WIDTH OF PAVEMENT _____ FEET
POSSIBLE FUTURE EXPANSION _____
TYPE OF SURFACE _____ THICKNESS _____ BASE _____ THICKNESS _____
DITCH DEPTH _____ RAISED CURB _____ BERM WIDTH _____
SHALL PERMIT BE GRANTED _____
WHAT, IF ANY, ADDITIONAL REQURIEMENTS ARE TO BE IMPOSED _____
_____

PERMIT NO. _____ BY _____

DATE ASSIGNED _____ TITLE _____

INSTRUCTIONS

(1) Owner of proposed installation (application by contractor not acceptable).
(2) Mailing Address of Owner.
(3) State fully and completely type of installation proposed.

If pipe line give the following information:

Type of service (water, oil, gas, sewer – sanitary or storm, etc.); if carrying liquid or gas under pressure, state pounds per square inch, internal diameter, wall thickness of pipe, kind and grade of pipe, length of line and proposed location with respect to pavement or right of way line; if pipe or conduit is to cross highway and crossing cannot be made without disturbing pavement, advise condition requiring such method of installation.

(4) Give County Route and distance from some geographical point, such as intersecting highways, city or village corporation limits, section lines, and county or township highways.

(5) Attach two (2) copies of a plan showing proposed location of installation with reference to pavement, right of way line, and owner's property lines. If installation crosses the highway, show cross section of present roadway and proposed installation. (Plan should show information listed under item (4).).

(6) Give anticipated dates for beginning and for completion of proposed installation.

(7) A performance guarantee in the form of a bond or certified check will be required for all permits granted. The bond or certified check shall be posted prior to the issuance of the permit and shall remain in force for a period of ninety (90) days following completion of the restoration of Highway property.

(8) The bond or certified check shall be for the amount established by the Geauga County Engineer to insure the complete restoration of any pavement, drainage, shoulder, structures, sod or other items disturbed by the permittee.

(9) Performance Bond with _____

_____(Name of Company)

Effective Date _____ Expiration Date _____

Amount $ _____

Certified Check (Amount $_____)

APPENDIX 4

HIGHWAY USE PERMIT Township: VARIOUS
County Road: CH000 Permit No. 99-0000-MIS

GEAUGA COUNTY ENGINEER'S PERMIT DEPARTMENT

470 Center Street, Bldg. 5
Chardon, OH 44024-1068

(440) 286-3936
(440) 285-2222 Ext. 6300
(440) 564-7131 Ext. 6300
(440) 834-1856 Ext. 6300

Subject to all of the items, conditions, and restrictions printed or written below and on the reverse side hereof, permission is hereby granted to:

Phone:
Fax:

FOR THE PURPOSE OF : SAMPLE **PERMIT FOR RECORDS AT 1234 ANYPLACE DRIVE**

WORK TO BEGIN ON OR ABOUT:

SAMPLE PERMIT FOR HIGHWAY USE MANUAL.
ALL WRITTEN NOTES FOR CONTRACTORS GO IN THIS SPACE

No work shall be done under this permit until the party or parties to whom it is granted shall have communicated with and received instructions from:

This permit is to be in the possession of employees in charge of work at all times. To be shown upon request to any employee of the Geauga County Engineer, Geauga County Commissioners, or Geauga County Sheriff.

Failure of the Permit Holder to notify the Permit Department before work commences, or if work is cancelled, may result in withholding of future permit applications.

This permit shall be void unless the work herein contemplated shall have been completed before:

Robert L. Phillips, P.E., P.S.
Geauga County Engineer

Authorized Agent: Permit Coordinator

GENERAL PROVISIONS IN FORCE IN SO FAR AS THEY APPLY TO THE WORK TO BE DONE UNDER THIS PERMIT

(See Sec. 5547.04 Ohio Revised Code)

The granting of this permit does not in any way abridge the right of the Geauga County Board of Commissioners in their jurisdiction over the Geauga County highways. If, in the process of any future work or for the benefit of the traveling public, it becomes necessary, in the opinion of the Geauga County Engineer to order the removal, reconstruction, relocation, or repair of any of the fixtures, or work performed under this permit, said removal, reconstruction, relocation, or repair shall be wholly at the expense of the owners thereof, and be made as directed by the Geauga County Engineer.

The Geauga County Engineer shall act for and on behalf of Geauga County in the issuance of and the carrying out of the provisions of all permits.

The Geauga County Engineer shall have full authority to insure that the provisions of this permit are fully complied with; and retains the right to reject any materials or workmanship in the restoration of Geauga County Highway facilities. Failure on the part of the permittee to conform to the provisions of this permit will be cause for suspension, revocation or annulment of this permit, as the Geauga County Engineer deems necessary.

If the party or parties to whom this permit is issued does anything contrary to the orders of the Geauga County Engineer and after due notice, fails to correct such work or to remove such structure or material as he or they may be ordered to remove, the Geauga County Engineer may correct such work or remove such structures or material; and the party or parties to whom this permit is issued shall reimburse the Geauga County Engineer for any expense incurred in correcting the work or removing the structure or materials.

All the work herein contemplated shall be done under the inspection and to the satisfaction of the Geauga County Engineer.

Except as herein authorized, no excavation shall be made or obstacle placed within the limits of the highway in such manner as to interfere with the travel over the road.

If any grading, sidewalk, or other work done under this permit interferes with the drainage of the highways in any way, such drainage basins and outlets shall be constructed as may be necessary to take proper care of said drainage.

The acceptance of this permit or the doing of any work hereunder shall constitute an agreement by the party or parties to whom the permit is granted to comply with all of the conditions and restrictions printed or written herein.

All of the above conditions shall be applicable to the work herein authorized, unless the same are inconsistent with the conditions on the face of the permit, in which case the conditions written or printed on the face of the permit shall apply

Highway property, disturbed by the permittee, shall be restored using materials, design and workmanship in conformance with the Geauga County Commissioner's Highway Use Manual.

All work requiring men or vehicles on the pavement or shoulders shall comply with all of the requirements of the Ohio Manual of Uniform Traffic Control Devices.

Failure to comply with this requirement will be cause for immediate suspension of the permit until the proper traffic controls have been provided.

The permittee, upon completion of the work, shall leave the highway clean of all debris, excess materials temporary structures, and equipment, and all parts of the highway shall be left in an acceptable condition.

The permittee shall save harmless Geauga County and all of its representatives from all suits, actions, or claims of any character, brought on account of any injuries or damages sustained by any person or property or otherwise, in consequence of any neglect or on account of any act or omission as a result of the issuance of this permit to include reimbursement of any fees and costs incurred by Geauga County.

SECTION II

POLICIES AND PROCEDURES FOR THE ISSUANCE OF SPECIAL HAULING PERMITS ON COUNTY MAINTAINED HIGHWAYS

A. PERMIT PROCEDURES

1. GENERAL

a. The procedures set forth herein shall serve as a guide in establishing a uniform method for the application of regulations governing the issuance of permits to operate or move vehicles or combinations of vehicles of a size or weight of a vehicle or load exceeding the maximum specified in Sections 5577.01 to 5577.09 of the Ohio Revised Code on or across any and all Geauga County maintained highways.

b. Issuance of SPECIAL HAULING PERMITS shall apply only to County highways outside municipal corporations unless the County has by agreement, assumed full maintenance of a section of a highway that lies wholly or in part within a municipal corporation.

c. Requests for SPECIAL HAULING PERMITS must be made in accordance with the policies and procedures as set forth in this section. Applicants are advised that these permits cover only Geauga County highways. Permits to move over state highways must be obtained from the Director of Transportation. Permits to move over township maintained highways must be obtained from individual township boards of trustees. Geauga County assumes no responsibility for the failure of the applicant to secure such applicable State or township permits.

2. APPLICATION FOR PERMIT

a. Application for SPECIAL HAULING PERMIT forms are available at the office of the Geauga County Engineer, 470 Center Street, Bldg. 5, Chardon, OH 44024-1068.

b. Completed applications containing all required information as outlined on the application form shall be returned to the Geauga County Engineer's Office for processing.

c. Applications shall bear the signature and the title of the person (or his/her authorized representative) assuming full responsibility for the proposed move.

3. APPLICATION REVIEW

a. After receiving the application, the County Engineer's Office will review the form for completeness.

b. Review time will be governed by the amount of weight and size of the vehicles or loads to be moved together with the length of the proposed route and the impact the move will have on the highway. Generally, twenty-four (24) hours should be allowed for processing any application.

c. If, after reviewing the application, the County Engineer's Office determines that the proposed move would materially affect the appearance, operation or maintenance of the highway, a conference will be scheduled to discuss possible revisions to the proposed route and/or reductions in size and weight of the load.

4. BONDS AND INSURANCE

Prior to issuance of a SPECIAL HAULING PERMIT, the applicant will be required to furnish the following:

a. Liability Insurance

A Certificate of Liability Insurance with limits of not less than $1,000,000 bodily injury liability, $1,000,000 each occurrence and $500,000 property damage liability. If the applicant does not have specified insurance limits but has an excess umbrella liability policy of $1,000,000 or greater, the excess liability policy shall be considered as acceptable insurance coverage. There shall be a Special Contractual Endorsement attached and filed with the Certificate of Liability Insurance (see Appendix I of this section).

b. Surety Bond

If the applicant for a Special Hauling Permit is self-insured, a Surety Bond or certified check is required in an amount sufficient to pay for all damages that may occur to all County maintained highways, bridges and culverts. All Surety Bonds in the amount set by the Geauga County Engineer must be submitted on forms prepared by the Geauga County Engineer (see Appendix 2 of this section).

5. ISSUANCE OF PERMITS

a. After all necessary insurances, bonds, certified checks have been posted and after both the applicant and the County Engineer have agreed on the time of the move and the route, the County Engineer, acting as the representative of the County Commissioners, will issue the permit.

b. The Geauga County Engineer, acting under the authority of the County Commissioners, may issue a permit, reject the application or request a revised application be submitted.

c. Issued permits will be on the form approved by the Geauga County Commissioners and signed by a representative of the Geauga County Engineer.

d. A SPECIAL HAULING PERMIT will not be issued if inspection of the proposed route indicates that the movement cannot be made without causing damage to highways, bridges or culverts or without causing unnecessary inconvenience to the traveling public.

6. TYPES OF SPECIAL HAULING PERMITS

a. Trip and Return: This permit is for overweight loads to travel to and from a single location. Tire sizes, axle weights, axle numbers, load weight, gross weight, tractor and trailer empty weights, types and license numbers will be required. All axle weights must still be legal as stated in the Ohio Department of Transportation's Special Hauling Rules and Regulations.

b. Annual Overwidth: This permit covers legal weight loads that are from 8'6" up to and including 12' width. A single permit will cover the tractor and any trailers or legal loads that fall within this gross width for a period of one year.

c. Construction Permit: This permit provides a company undertaking a project to permit the oversized loads going to and from a project on a specified route for a specified period of time. A permit is needed for each tractor.

d. Special Permits: Permits that require special conditions will be reviewed by the Geauga County Engineer's Office and any special arrangements, routing, bonds, escorts, videoing of the roadway, contact with utilities, etc. will be made with the applicant and all applicable parties. Each permit will be reviewed individually to determine what arrangements will need to be handled and whether the permit will be granted. An example of a special move is a building/house move.

7. APPLICANT'S RESPONSIBILITIES

a. The applicant is responsible for following all safety requirements listed under the Ohio laws such as signs, flaggers, escorts, axle weights, etc. The applicant is also responsible for any additional safety requirements listed by the Geauga County Engineer's Office to insure a safe move.

b. The applicant is responsible for the safety and accessibility of the destination. The roadway and site must be kept clear of all materials and obstacles to the traveling public during the entering of any site. Access to the site should be easily accessible and inspected prior to the movement of the vehicle and load.

B. FEES

1. GENERAL

a. A fee, payable to the Geauga County Engineer, will be charged to cover the cost of issuing a permit.

b. The amount of the fee will be established by resolution and will be reviewed annually by the Geauga County Commissioners and the Geauga County Engineer.

c. Failure to pay invoices billed for approved permit applications within thirty (30) days after receipt of invoice may result in the withholding of issuance of any future SPECIAL HAULING PERMIT until the invoices have been paid.

d. Permits pulled for violations issued by any law enforcement officer may require the applicant to re-apply and submit an additional permit fee for renewal of any SPECIAL HAULING PERMIT. Repeated violations, any misrepresentation of the facts, or omission of facts may result in the refusal of further permits being issued to the applicant.

SPECIAL HAULING PERMIT
CONTRACTUAL ENDORSEMENT

It is hereby understood and agreed that the policy to which this endorsement forms a part is extended to cover the contractual agreement between the Named Insured and the County of Geauga in relation to the SPECIAL HAULING PERMIT issued by the County of Geauga, of which paragraph 2 is quoted herein:

"Permittee will be held liable for any damage caused by the movement. The County assumes no responsibility for damage to the permittee's equipment or load being moved due to any such failure. The permittee agrees to compensate the County of Geauga for any damage to a roadway or road structure and also to hold the County of Geauga and the County Engineer harmless from all claims, damages or proceedings of any kind and from all responsibility for personal or property damages (public or private) caused directly or indirectly as a result of the transportation of said vehicle(s) or object(s)."

The applicant will file a Certificate of his/her Liability Insurance showing that he/she has procured adequate insurance to cover the provisions of paragraph 2.

The insurance afforded by this endorsement is only with respect to the following Coverage and Limits of Liability:

COVERAGE	LIMITS OF LIABILITY
Contractual Liability	Each occurrence - $ 500,000 Property damage $1,000,000 Bodily injury to one person $1,000,000 Bodily injury to all persons injured in any one accident

Effective Date of Endorsement _____ Effective Date of Policy _____

Date Endorsement Issued _____ Expiration Date _____

This endorsement is subject to the terms, conditions, limitations and agreements of the policy to which it is attached insofar as the same are not consistent with the specific undertakings of the Endorsement. In the event of the cancellation of this policy, a minimum of ten (10) days written notice will be given to the Geauga County Commissioners, prior to the expiration date of the policy.

This Endorsement, when countersigned by a duly authorized agent and attached to Policy No.

_____, issued to _____
shall be valid and form a part of said policy.
Countersigned at _____ this _____ day of _____, _____.

_____ _____
OFFICER'S SIGNATURE Authorized Agent

_____
Position

BOND

COUNTY OF GEAUGA
Covering Any and All Permits Issued to Principal
for Movement of Excess Loads Over County Highways

KNOW ALL MEN BY THESE PRESENTS, that we, the undersigned, being _____ _____ of _____ as principal, and _____ of _____ as surety, are hereby held and firmly bound unto the COUNTY OF GEAUGA in the penal sum of _____ good and lawful money of the United States, for the payment of which well and truly to be made, we hereby jointly and severally bind ourselves, our heirs, executors, administrators, successors and assigns, by these presents.

WHEREAS, the above-named principal has made application to the County of Geauga for a permit to move one or more loads in excess of the legal limitation over certain county highways and may make further applications, and as a condition precedent to granting such applications, the County of Geauga has established the requirements of the furnishing of a penal bond in the sum of _____ by the applicant.

KNOW, THEREFORE, the condition of the above obligation is such that if the above-named principal shall move the load(s) described in any and/or all of the applications filed by the above-named principal on and after the date of the execution of this obligation over the county highways, bridges and culverts of Geauga County in the manner prescribed in the permit therefore duly issued by the said County of Geauga and shall well and truly pay for all damages to said highways, bridges and culverts, which are and/or may be caused by the movement of such load(s) by the above-named principal over or upon the highways, bridges and culverts of the county, and all other claims for damage lawfully accruing in favor of the county resulting therefrom, and any fines or penalties to which the said principal shall become liable to pay, and shall save the County of Geauga harmless in and/or from any and all suits, claims for damages and/or proceedings arising out of the movement or movements of any of said excess load(s) over said highways, bridges and culverts, and shall observe all terms and conditions of the permit or permits or any of them issued to said principal on/and after the date of this obligation, then this obligation to be void, otherwise to remain in full force and effect.

PROVIDED, HOWEVER, that the said surety may cancel this bond at any time by giving FIFTEEN (15) DAYS notice in writing, by Registered United States Mail, addressed to the Geauga County Board of Commissioners, 231 Main Street, Courthouse Annex, Chardon, OH 44024-1294, and that FIFTEEN DAYS AFTER the actual receipt by the County of Geauga of such written notice, there shall be no further liability to the surety for defaults hereunder, provided, however, that the service of such written notice shall not be construed to waive, release or forego any obligation which may have arisen prior to the effective date of such written notice.

IN WITNESS WHEREOF, we have hereunto set our hands and seals this _____ day of _____, A.D. _____.

Signed _____
Principal

Name _____

Title _____

(For Use Where Principal is a Corporation)

CERTIFICATE – This is to certify that the Board of Directors of _____ _____ by Resolution duly adopted on _____ day of _____, A.D. _____ did authorize _____being _____ of said corporation to sign the name of said corporation to a surety bond in the sum of _____ payable to the County of Geauga for damage resulting from the movement of excess load(s) over the highway, bridges and culverts of said county.

_____
Corporation Name

By _____
Secretary

Signed _____
Surety

By _____
Name

Title _____

MAIL OR DELIVER TO:

Office of the Geauga County Engineer
470 Center Street, Bldg. 5
Chardon, OH 44024
Telephone: (440) 286-3936
Fax: (440) 285-9864

Application for Special Hauling Permit No _____
This becomes a permit when validated by the Office of the Geauga County Engineer. This application and permit issued in accordance with Section 4513.34 Ohio Revised Code.

DATE _____

Permit to be Transmitted by
☐ Telegram
☐ Facsmile
☐ Mail

Name And Address (TYPE OR PRINT)

A/C ( )

Telephone Number

Application Must Be Signed Below in Space Provided

Type Permit:
☐ Construction Equipment
☐ Oil Drilling
☐ Other

Fee $_____ Paid by
☐ Cash ☐ Check ☐ Money Order
☐ Deposit Account _____
Make Checks Payable to: Geauga County

THIS PERMIT IS VALID
BEGINNING _____
ENDING _____

MAKE & MODEL	LICENSE NO.	STATE	ALL WEIGHTS IN POUNDS
Engineer Truck or Tractor			
Semi-Trailer			
Other Trailer (Jeep, Dolly)			

Description Of Load Including Make & Model If Applicable	Net Load
	Total Gross Weight

All Dimensions Feet & Inches
DIMENSIONS

Vehicle & Load Overall Length	Height	Width

Load Only Length	Height	Width

Check if Applicable
☐ Load is towed on its own frame and undercarriage
☐ Load is under its own power.

☐ All weights (axle & gross) are LEGAL in accordance with Section 5577.04 Ohio Revised Code. If checked, do not complete axle loads & spacing Section of this application

AXLE SPACING Feet & Inches	Axel No.	AXLE LOADS	TIRES No. On Axle	TIRES Sizes
	1.			
A	2.			
B	3.			
C	4.			
D	5.			
E	6.			
F	7.			
G	8.			
H	9.			
I	10.			
Total Gross Weight				

MOVEMENT TO BE MADE
From _____
To _____
Detailed Route _____

Limitations listed on attached form apply. Special provisions as checked or listed below apply. Move only during daylight hours. Movement is prohibited Saturday, Sunday, or a Holiday.

Permittee is responsible to check the route for abnormal or changed or unknown conditions which may exist during any move. Permission to travel state or township roads or the Ohio Turnpike must be obtained from the proper authorities.

I _____ do hereby swear that I am
(Printed Name)
the applicant or his/their legally authorized representative and that the statements made in the foregoing application are true and correct to the best of my knowledge:

SIGNATURE _____

TITLE _____ DATE _____

PERMIT OFFICE USE ONLY
VOID IF BLANK, ALTERED OR UNSIGNED

GEAUGA COUNTY
LIMITATIONS/PROVISIONS ON THE USE OF A SPECIAL HAULING PERMIT
THIS IS A TWO-SIDED FORM AND MUST BE CARRIED IN ITS ENTIRETY
GENERAL LIMITATIONS

1. The original copy of the Special Hauling Permit shall be in the possession of the driver at all times during the progress of transportation and will be shown on demand to any Deputy Sheriff, State Highway Patrolman, or other law enforcement officer. SPECIAL HAULING PERMITS MAY NOT BE RETRANSMITTED.

2. The permission granted restricts the movement of the vehicles(s) or object(s) to the roads specified, between the point designated, and within the time allotted. Permittee is responsible to check the route for abnormal, changed, or unknown conditions, which may exist during any move. **Permission to travel state or township roads, local streets not part of the county road system, or the Ohio Turnpike must be obtained from the proper authorities.**

3. No vehicle(s) or object(s) being transported under a Special Hauling Permit shall be left parked on the roadway either day or night except in case of an emergency, in which case adequate protection shall be provided for the travelling public. The vehicle(s) shall not be loaded or unloaded within the limits of the highway.

4. The operator of the vehicle must comply with all laws, rules, or regulations covering the movement of traffic over highways and streets.

5. Special Hauling Permits will not generally be issued for a built-up load that is divisible into legal loads or loads that have not been loaded to the least over dimension or the least overweight. Miscellaneous items may, however, be transported on the same vehicle with an over dimension piece or pieces so long as the miscellaneous items do not add to the over dimension. It is not necessary to identify these miscellaneous items. If, in the event of an extenuating circumstance, a permit is issued for a divisible load in which two or more pieces add to the over dimension or overweight, such load will be adequately described.

6. A Special Hauling Permit is void at any time road, weather, or traffic conditions make travel unsafe, as determined by the Geauga County Sheriff.

7. Movement of mobile homes, manufactured structures, office trailers, and park model recreational vehicles is prohibited when wind velocity exceeds 25 mph on the roadway or 15 mph on bridges.

OPERATING LIMITATIONS

1. No vehicle(s) or object(s) being transported under a Special Hauling Permit shall travel in convoy with any other oversize/overweight vehicle or vehicle and load. Every vehicle operating under a permit shall maintain a minimum spacing of 500' from all vehicles traveling in front and in the same lane as said vehicle whenever possible.

2. No vehicle operating under a Special Hauling Permit shall pass other vehicles traveling in the same direction.

3. Any load with an overall height in excess of 14 feet 10 inches shall be required to coordinate the travel route with the Geauga County Engineer's Office, utilities, etc., which may obstruct safe, clear movement.

4. Any load in excess of 100,000 lbs. shall be required to coordinate the travel route with the Geauga County Engineer's Office.

5. Reductions in legal weight posted on roadways or bridges must be obeyed. Contact the Geauga County Engineer's Office immediately if your route includes legal load reductions.

6. Movement of all overweight vehicles/loads traveling under a Special Hauling Permit shall be strictly prohibited while Frost Laws are in effect.

DAYS/HOURS OF OPERATION

1. Overweight vehicle/loads that are not over dimensional, traveling under the authority of a Special Hauling Permit, will not be restricted as to travel hours or days so long as the overweight vehicle/load can move without obstructing the normal flow of the traffic.

2. With the exception of permitted legal dimensioned overweight vehicle/loads noted in 1. above, vehicle/loads traveling under the authority of Special Hauling Permits shall be prohibited from movement on the following holidays/holiday weekends: New Year's Day, Memorial Day, Independence Day, Labor Day, Thanksgiving Day and Christmas Day. Holiday prohibitions begin at noon the day preceding and continue until one-half hour before sunrise the day following the holiday or holiday weekend.

3. Movement of all vehicles/loads in excess of twelve feet in width shall be required to have an escort vehicle.

4. Movement of all vehicles/loads in excess of twelve feet in width shall be prohibited from 3:00 p.m. on any Saturday until one-half hour before sunrise on the following Monday. Furthermore, movement of all vehicles/loads in excess of twelve feet in width is prohibited from 3:00 p.m. on any Friday until one-half hour before sunrise the following Saturday.

5. With the exception of limits noted in 1., 2., 3., and 4. above, permit vehicles and loads may move during daylight hours, Sunday through Saturday. Daylight hours are defined as one-half hour before sunrise until one-half hour after sunset.

WARNING FLAGS AND SIGNS

1. Warning flags shall be 18 inches square, red or orange in color, in good repair and free of printing or other markings. Flags shall be securely fastened by at least one corner or securely mounted on a staff.

2. Warning flags shall be displayed on all over dimensioned vehicles and loads.

3. Over width vehicles and loads shall bear two flags at the widest extremities of the vehicle or load as well as one flag at each corner of the vehicle or load. Warning flags are not required to be displayed on the tractor.

4. Over length vehicles and loads or vehicles and loads with a rear overhang of 4 feet or greater shall display a single flag at the extreme rear if the over length or projecting part is two feet wide or less. Two flags shall be displayed if the over length or projecting portion is wider than two feet and the flags should be located to indicate maximum width.

5. Warning signs, when required, shall read "OVERSIZE LOAD" and shall be at least 7 feet long and 18 inches high. The sign's background shall be yellow with black lettering. Letters shall be at least 10 inches with a 1.41 inch brush stroke. If series E Modified is used, the brush stroke is to be two inches.

6. OVERSIZE LOAD signs shall be displayed on any vehicle or vehicle/load exceeding the maximum legal length limit as set forth in the Ohio Revised Code, section 5577.05.

7. OVERSIZE LOAD signs shall be displayed on any vehicle or vehicle/load with an overall width of 10 feet or greater.

8. OVERSIZE LOAD signs shall be displayed on any vehicle or vehicle/load with an overall height in excess of 14 feet 6 inches.

9. OVERSIZE LOAD signs, when required, shall be displayed on the front and rear of the over dimensioned vehicle or vehicle/load.

LIGHTING

1. PERMITTED VEHICLE STANDARD LIGHTING – All standard vehicle lighting must be in operating order; THE HEADLIGHTS MUST BE ON DURING THE MOVEMENT OF ANY OVER DIMENSION VEHICLE OR VEHICLE AND LOAD.

ESCORT VEHICLES

1. Escort vehicles, when required by a Special Hauling Permit to accompany an over dimensional or overweight vehicle/load, shall be required to display a warning sign, yellow with black letters, reading 'OVERSIZE LOAD". The sign shall be 5 feet long by 12 inches high with 8 inch high letters. Escort vehicles shall also be required to maintain radio communication with the operator of the permitted vehicle and shall also be required to be equipped with a roof mounted amber flashing or rotating light(s). Driver of the escort vehicle is to act as a flagman when needed.

2. One rear escort vehicle shall be required for the transportation of any vehicle/load with an overall length in excess of 90 feet.

3. One lead escort vehicle shall be required for the transportation of any vehicle/load with an overall width in excess of 12 feet.

4. One lead escort vehicle equipped with a height-sensing device shall be required for the transportation of any vehicle/load with an overall height in excess of 14 feet 6 inches.

5. One lead and one rear escort shall be required on any vehicle or vehicle/load with an overall width in excess of 14 feet 6 inches.

6. One lead and one rear escort shall be required on any vehicle or vehicle/load with an overall height in excess of 14 feet 10 inches.

7. If more than one of the conditions set forth in numbers 2. through 4. above are met, (for example, a load exceeding 12 feet in width and 90 feet in length), two escorts (one lead and one rear) shall be required.

8. Lead escort vehicle, when required, is to proceed 500 feet in advance of permit vehicle/load.

9. Rear escort vehicle, when required, is to follow 500 feet in back of permit vehicle/load.

PENALTY FOR VIOLATION

Non-compliance with the general or special provisions of a Special Hauling Permit, exceeding the weights or dimensions granted, or operating on dates or upon highways other than assigned shall render the permit null and void and the operator of the vehicle subject to arrest, as provided in sections 5577.02 to 5577.05 inclusive, of the Ohio Revised Code.

These limitations and provisions describe the general requirements placed on the operation of over dimension and overweight vehicles traveling on County roads, and are in addition to specific provisions stated on the permit or its attachments. For reference or detailed information, please contact the Office of the Geauga County Engineer.

SECTION III

POLICIES AND PROCEDURES FOR THE INSTALLATION OF DRIVEPIPES WITHIN THE RIGHT-OF-WAY ON COUNTY AND TOWNSHIP HIGHWAYS

DRIVEWAY PERMITS

1. General

Driveway Permits are required for proposed driveways within County or Township rights-of-way.

The incorporated municipalities of Geauga County (villages & cities) each issue their own permits.

2. Permit fee $75.00. The Engineer's Office will determine the correct size and inspect the installation of drivepipes within County rights-of-way. Townships will be responsible for inspection of drivepipes installed within their Township's rights-of-way.

3. Location – The following information is needed for the permit application:

   a. The parcel number assigned by the Auditor's Office for the property on which the drive will be installed.

   b. The approximate date of completion of drive installation.

   c. How many feet from either lot line the drive will be located.

4. Installation of Drivepipe –

   a. The County Highway Department will install, at no cost, a driveway culvert within county rights-of-way, for new or existing locations. Property owners are responsible for purchasing the culvert pipe. Once the pipe is on the property, the permit holder can call the Engineer's Office to request installation. Installation will be within approximately two (2) weeks from the time of the request.

   b. Property owners may wish to have their driveway culvert installed by their contractor. The Engineer's Office is not responsible for any costs associated with drivepipe installations by a contractor. The property owner shall notify the Engineer's Office at least 24 hours in advance of installation so the Engineer may schedule the inspection.

   c. Some townships will also install drivepipes within Township rights-of-way. Property owners should contact their township road department to determine if this service is available. If it is not available, the property owner is responsible for the installation. The permit holder shall notify the township road superintendent at least 24 hours in advance of installation so the inspection can be scheduled.

5. Addresses – Included in the issuance of a new driveway permit, the lot/parcel will be assigned an address. The Engineer's Office assigns addresses for most parcels in Geauga County. Exception to this are:

Aquilla Village
Village of South Russell
City of Chardon

6. Other Permits – Various other county departments require permits during the building process. All other permits require an address prior to issuance.

DRIVEWAY PIPE INSTALLATION GUIDELINES

THE FOLLOWING SPECIFICATIONS APPLY:

- MINIMUM LENGTH = See Permit
- DRIVEWAY SURFACE SHALL BE CROWNED A MIMIMUM OF 1/4" PER FOOT
- LOW POINT OF DRIVEWAY SHALL BE AT DRIVEPIPE
- ALL SURFACE WATER SHALL DRAIN INTO DITCH NOT INTO ROADWAY
- A TRENCH DRAIN MAY BE REQUIRED ACROSS THE ENTRANCE OF DRIVEWAYS WITH EXTREME SLOPES WHERE WATER CANNOT BE PREVENTED FROM DRAINING ONTO THE ROADWAY

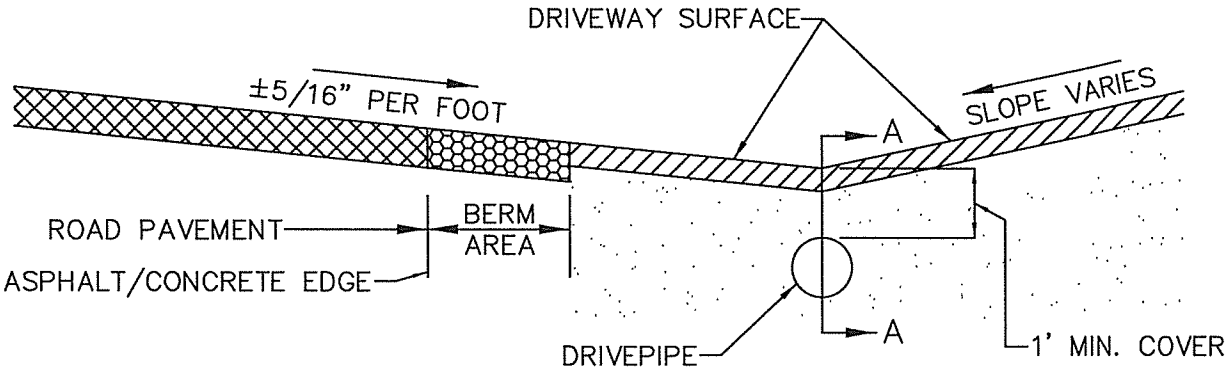

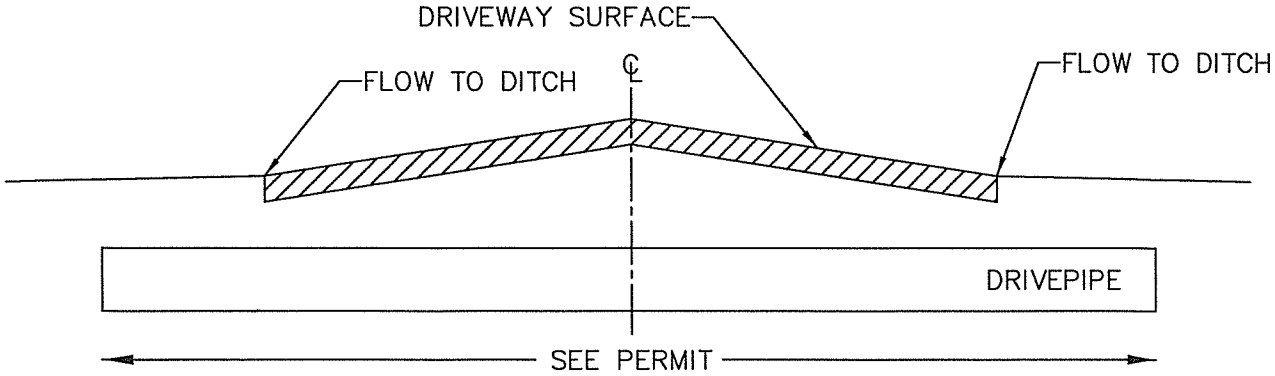

SECTION A–A

GEAUGA COUNTY
MAILBOX INSTALLATION POLICY

Effective: March 1, 1990

The laws of the State of Ohio provide for the removal of obstructions within the county highway system right-of-way. The following policy should govern the type and installation of mailbox units and mailbox supports within the rights-of-way in Geauga County.

All mailbox units shall comply with the United States Postal Regulations and with the following:

1. The mailbox unit shall be entirely of plastic and/or lightweight galvanized steel/aluminum construction. Newspaper delivery boxes shall be of the same type of construction and of minimum dimensions suitable for holding newspapers.

2. The post shall be a single 4-inch x 4-inch diameter wooden post or a metal post no greater than 2 inches in diameter and no more than 24 inches into the ground. Mailbox supports shall not be set in concrete or be permanently affixed in any manner.

3. Multiple mailbox units of more than two (2) boxes may not be mounted on one support.

4. The door of the mailbox shall be placed a minimum of 4 inches outside the shoulder portion of the highway. When a mailbox is installed in the vicinity of existing guardrail, it shall be placed behind the guardrail unless otherwise approved by the Geauga County Engineer.

The suggested type of installation consists of a yielding support with a box of lightweight galvanized steel and/or plastic construction. Drawings are attached for further reference.

MAILBOX DETAIL

NOT TO SCALE

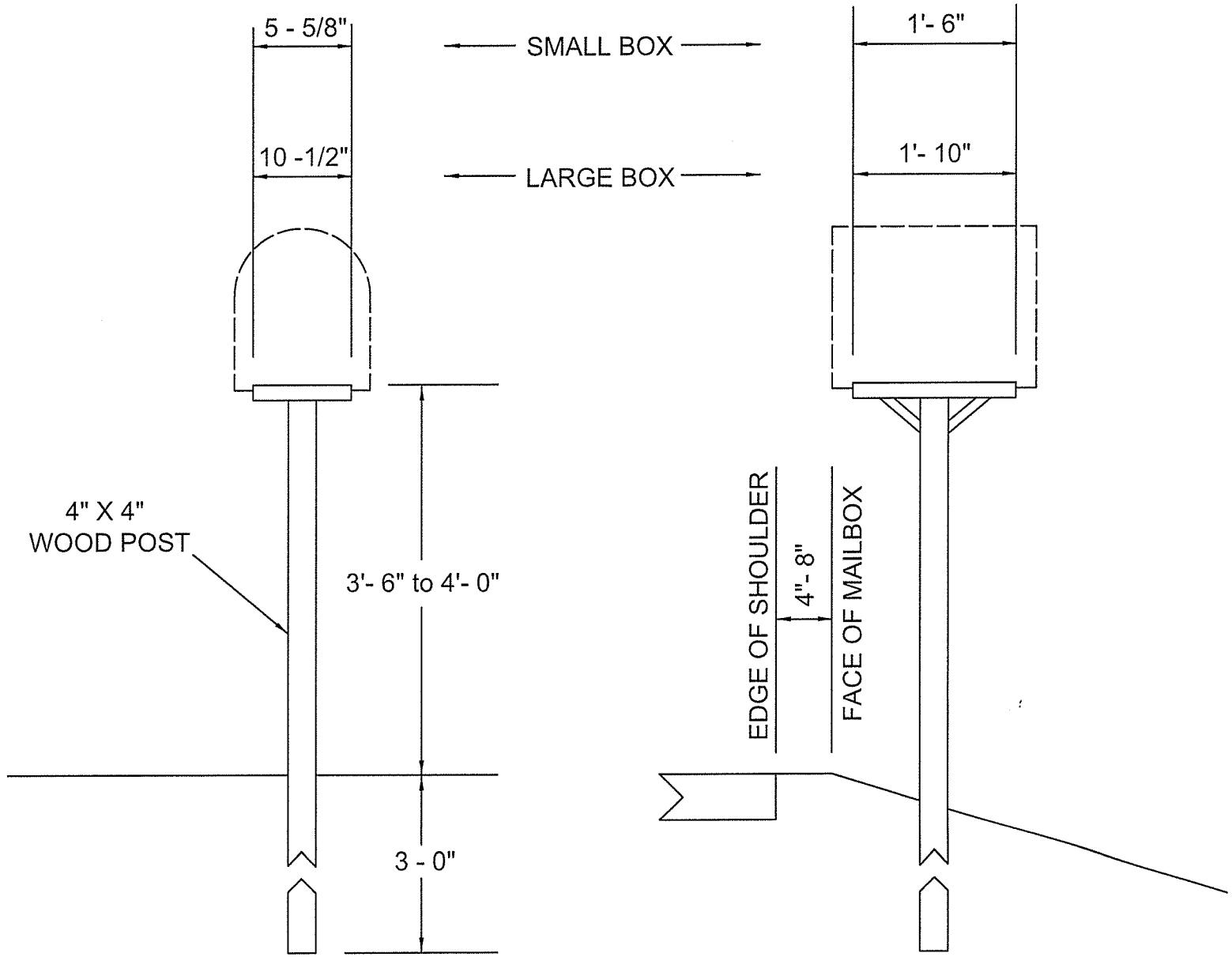

Ohio Statutes

Title 55. ROADS - HIGHWAYS - BRIDGES

Chapter 5543. DUTIES OF COUNTY ENGINEER

Current with legislation signed by the Governor as of 11/1/2015

§ 5543.09. Supervision by county engineer

(A) Except as provided in division (B) of this section, the county engineer shall supervise the construction, reconstruction, improvement, maintenance, and repair of the highways, bridges, and culverts under the jurisdiction of the board of county commissioners, and the construction, reconstruction, resurfacing, and improvement of public roads by boards of township trustees under sections 5571.01, 5571.06, 5571.07, 5571.15, 5573.01 to 5573.15, 5575.02 to 5575.09, and 5577.01 of the Revised Code. When the engineer has charge of the highways, bridges, and culverts within the engineer's county, and under the control of the state, the engineer shall also supervise their construction, reconstruction, improvement, and repair.

(B) For any particular project, with the approval of the county engineer, the board of township trustees of a township that has adopted a limited home rule government under Chapter 504. of the Revised Code may hire an independent professional engineer to assist the county engineer with the supervision of the construction, reconstruction, resurfacing, and improvement of public roads by the board under sections 5571.01, 5571.06, 5571.07, 5571.15, 5573.01 to 5573.15, 5575.02 to 5575.09, and 5577.01 of the Revised Code.

Cite as R.C. § 5543.09

History. Effective Date: 09-20-1999

Ohio Statutes

Title 55. ROADS - HIGHWAYS - BRIDGES

Chapter 5571. BOARD OF TOWNSHIP TRUSTEES

Current with legislation signed by the Governor as of 11/1/2015

§ 5571.05. Supervision of maintenance and repair of township roads

In the maintenance and repair of roads, the board of township trustees and any township highway superintendent appointed by it, shall be subject to the general supervision and direction of the county engineer. Such board of township trustees shall follow the direction of the engineer as to methods to be followed in making repairs.

Cite as R.C. § 5571.05

History. Effective Date: 10-01-1953

Ohio Statutes

Title 55. ROADS - HIGHWAYS - BRIDGES

Chapter 5571. BOARD OF TOWNSHIP TRUSTEES

Current with legislation signed by the Governor as of 11/1/2015

§ 5571.01. Road improvements

(A) A board of township trustees may construct, reconstruct, resurface, or improve any public road or part thereof under its jurisdiction, or any county road, intercounty highway, or state highway within its township. In the case of a county road, the plans and specifications for the proposed improvement first shall be submitted to the board of county commissioners of the county and receive its approval. In the case of an intercounty or state highway, the plans and specifications first shall be submitted to the director of transportation and receive the director's approval. The board of township trustees may widen, straighten, or change the direction of any part of a road in connection with the proceedings for its improvement.

(B) The board of township trustees may construct, improve, maintain, or repair the berm of any road under its jurisdiction, in order to provide a hard surface or other improved approach to rural mail boxes located on public highways.

(C) A board of township trustees, in conformity with the manual and uniform system of traffic control devices adopted under section 4511.09 of the Revised Code, may erect and maintain at intersecting roads, at least one of which is a township road, suitable signposts showing the names and numbers of the roads. The cost of the signs shall be paid from the township road fund.

(D) Subject to division (F) of this section, a board of township trustees, in conformity with the manual and uniform system of traffic control devices adopted under section 4511.09 of the Revised Code, may erect and maintain at intersecting roads, at least one of which is a township road, suitable signposts showing the direction and distance to any nearby municipal corporation. The costs of the signs shall be paid from the township road fund.

(E) Subject to divisions (F) and (G) of this section, a board of township trustees may purchase or lease and erect and maintain at intersecting roads, at least one of which is a township road, suitable traffic control devices and traffic control signals. The traffic control devices and traffic control signals and their placement and maintenance shall conform with the manual and specifications adopted under section 4511.09 of the Revised Code. In purchasing or leasing and erecting and maintaining the traffic control devices and traffic control signals, the board may expend any moneys that are available to it that legally may be expended for that purpose.

(F) If one of the intersecting highways as provided in divisions (D) and (E) of this section is a state highway, both of the following apply:

(1) No signpost showing the direction and distance to any nearby municipal corporation shall be placed at or near the intersection, and no traffic control device or traffic control signal shall be erected at the intersection, without prior permission of the director as required by section 4511.10 of the Revised Code.

(2) The department of transportation shall maintain any traffic control signal erected by the board of township trustees at that intersection.

(G) If one of the intersecting roads as provided in division (E) of this section is a county road, a board of township trustees shall not erect a traffic control device or traffic control signal at the intersection without prior permission of the county engineer of the county in which the intersection is located.

(H) No contract for the construction or repair of a bridge, the entire cost of which construction or repair exceeds fifty thousand dollars, shall be entered into by the township unless the plans are first approved by the director.

Cite as R.C. § 5571.01

History. Effective Date: 09-24-1999

Ohio Statutes

Title 55. ROADS - HIGHWAYS - BRIDGES

Chapter 5571. BOARD OF TOWNSHIP TRUSTEES

Current with legislation signed by the Governor as of 11/1/2015

§ 5571.02. Control and maintenance of township roads

The board of township trustees shall have control of the township roads of its township and, except for those township roads the board places on nonmaintained status pursuant to section 5571.20 of the Revised Code, shall keep them in good repair. The board of township trustees , with the approval of the board of county commissioners or the director of transportation, may maintain or repair a county road, or intercounty highway, or state highway within the limits of its township.

In the maintenance and repair of roads, the board of township trustees may proceed in any of the following methods:

(A) It may designate one of its number to have charge of the maintenance and repair of roads within the township.

(B) It may divide the township into three road districts, in which event each trustee shall have charge of the maintenance and repair of roads within one of those districts.

(C) It may appoint some competent person, not a member of the board of township trustees, to have charge of maintenance and repair of roads within the township, who shall be known as "township highway superintendent" and shall serve at the pleasure of the board . The method to be followed in each township shall be determined by the board of township trustees by resolution entered on its records.

Cite as R.C. § 5571.02

History. Effective Date: 09-28-1973; 06-10-2004